Optimization Modeling of Energy Processes

L. T. Biegler
Department of Chemical Engineering
Carnegie Mellon University
Pittsburgh, PA 15213

http://capd.cheme.cmu.edu
March, 2013

Energy Projects with NETL
(Energy Systems Initiative)

- ROM-based Flowsheet Optimization for IGCC (Y-D Lang)
  - ROMs developed from CFD models (gasifier and combustion)
  - Kriging models encapsulated within flowsheet optimization
  - High-fidelity optimization with 7% increase in power output

- Process Synthesis for Oxycombution (A. Dowling, Q. Gao, Z. Gao)
  - MPCC models for phase transitions (flash, MHEX, GIBBS)
  - Accurate shortcut models for complex columns (e.g., ASU)
  - MINLP models for Oxycombustion flowsheet synthesis

- Optimal Design/Operation of PSA Systems for CO2 Capture

  (A. Agarwal, S. Vetukuri, A. Dowling, Y. Wang)
  - Superstructure developed for PSA system
  - Pre-combustion models analyzed – within DOE benchmark
  - Applied with Sequential optimization strategies

Motivation for CO_2 Capture

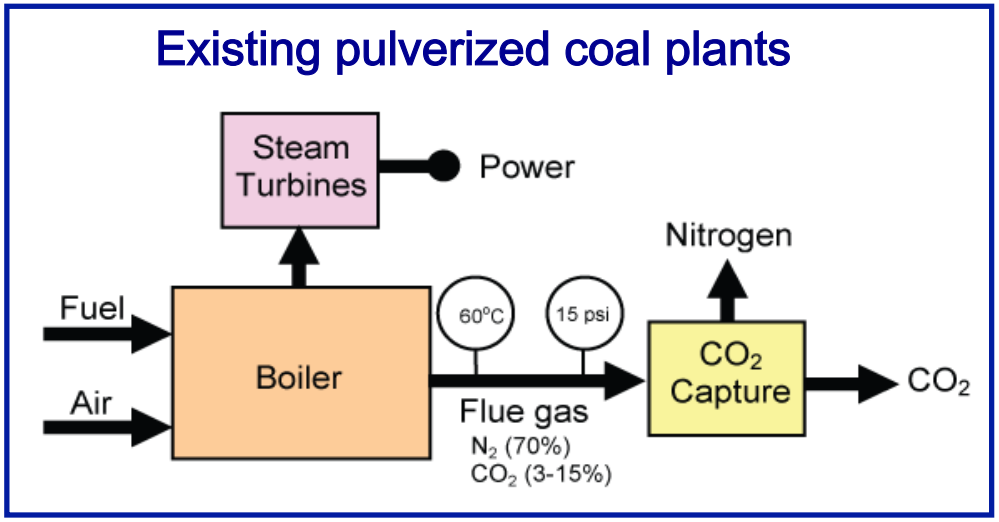

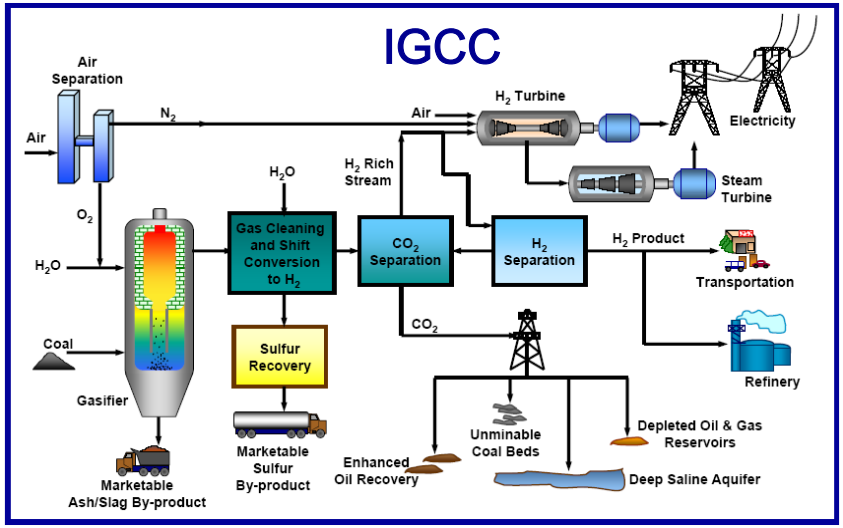

Post-combustion capture

Pre-combustion capture

Can we use PSA for carbon capture?

Challenges

- Which Sorbent works best for CO_2 capture?
- Which PSA cycle for high purity CO_2 capture?
- Computationally efficient flowsheet simulation/optimization with PDAE-based PSA model.

Optimization of PSA units for Carbon Capture

(Alex Dowling)

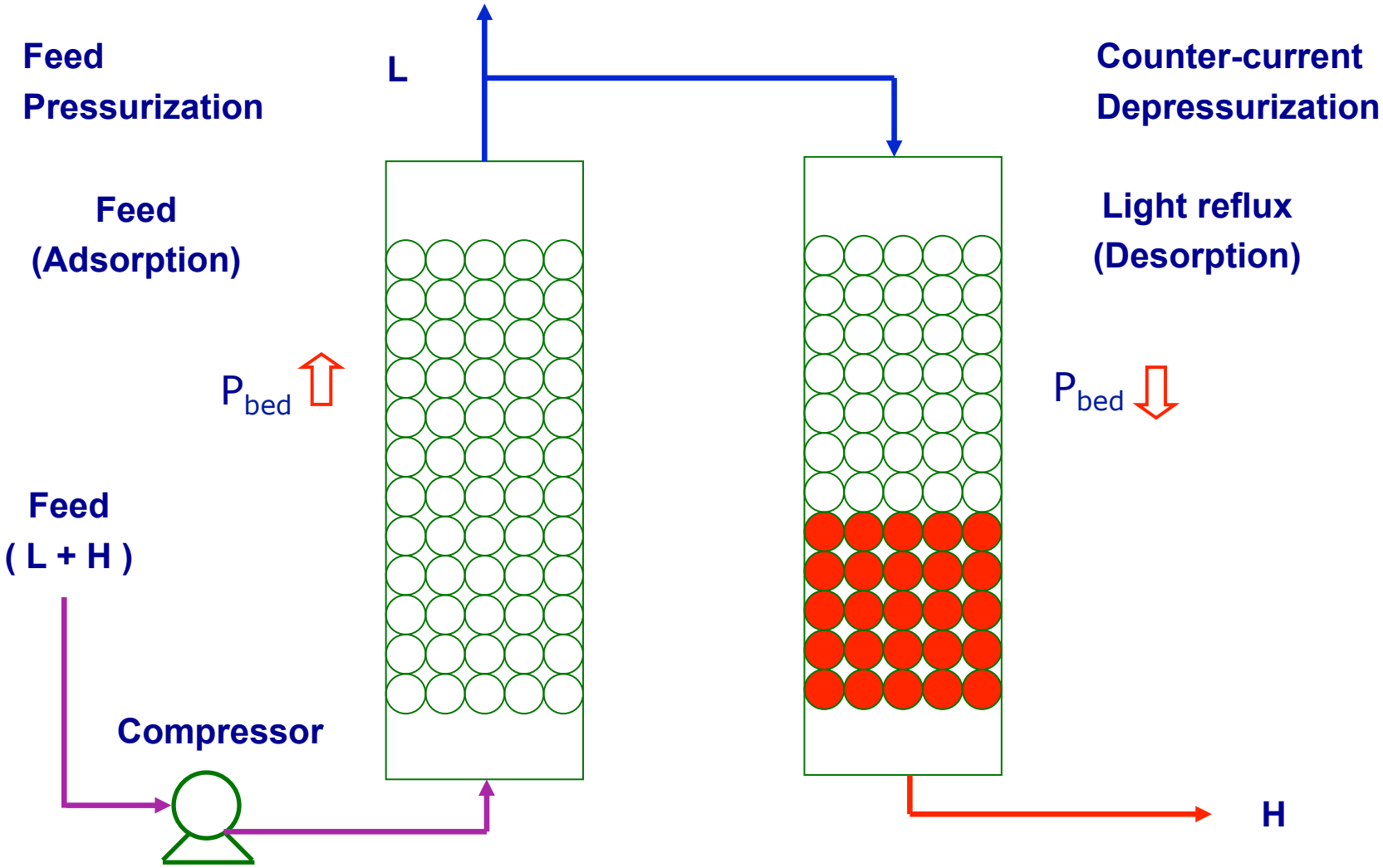

PSA Bed Model

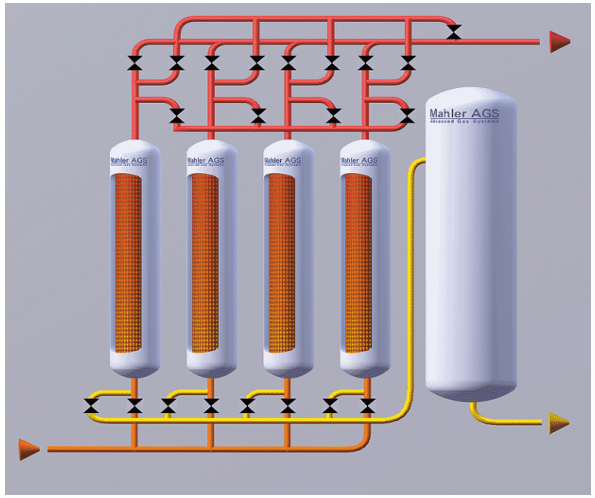

Component mass balance

$$\varepsilon_b \frac{\partial C_i}{\partial t} + (1-\varepsilon_b)\rho_s \frac{\partial q_i}{\partial t} + \frac{\partial (vC_i)}{\partial z} = 0 \qquad \forall i$$

LDF equation

$$\frac{\partial q_i}{\partial t} = k_i (q_i^* - q_i)$$

Dual-site Langmuir Isotherm

$$q_i^* = \frac{q_{1i}^s b_{1i} P y_i}{1 + \sum_{j=1}^{nc} b_{1j} P y_j} + \frac{q_{2i}^s b_{2i} P y_i}{1 + \sum_{j=1}^{nc} b_{2j} P y_j}$$

$$q_{mi}^s = k_{mi}^1 + k_{mi}^2 T \qquad b_{mi} = k_{mi}^3 \exp\left(\frac{k_{mi}^4}{T}\right) \qquad \forall i \qquad m = 1,2$$

Energy Balance

$$\left(\varepsilon_t \sum_{i=1}^{nc} C_i \left(C_{pg}^i - R\right) + \rho_s C_{ps} + \rho_w C_{pw}\left(\frac{4h_w}{D}\right)\right)\frac{\partial T}{\partial t} - \rho_s \sum_{i=1}^{nc} \Delta H_i \frac{\partial q_i}{\partial t} + \frac{\partial (vh)}{\partial z} + \frac{4h_c}{D}(T - T_w) = 0$$

$$C_{pg}^i = a_c^i + b_c^i T + c_c^i T^2 + d_c^i T^3 \qquad h = \sum_{i=1}^{nc} C_i C_{pg}^i T$$

Ergun equation

$$-\frac{\partial P}{\partial z} = \frac{150\mu(1-\varepsilon_b)^2}{d_p^2 \varepsilon_b^3} v + \frac{1.75(1-\varepsilon_b)}{d_p \varepsilon_b^3}\left(\frac{\sum M_w^i C_i}{1000}\right) v|v|$$

Ideal gas

$$P = \sum_i C_i RT$$

PSA process for CO_2 separation

- Applications
  - Steam/methane reformer off gas
  - Power plant flue gas

What is special about this problem?

- Most commercial cycles designed for light product recovery and purity with heavy product often treated as waste
- Structural changes in cycles to offer CO_2 capture at high purity and recovery
- Need testbed to evaluate new sorbents – dependent on cycle and operating conditions

Two-bed PSA Superstructure

Systematic formulation to develop, evaluate and optimize PSA cycles

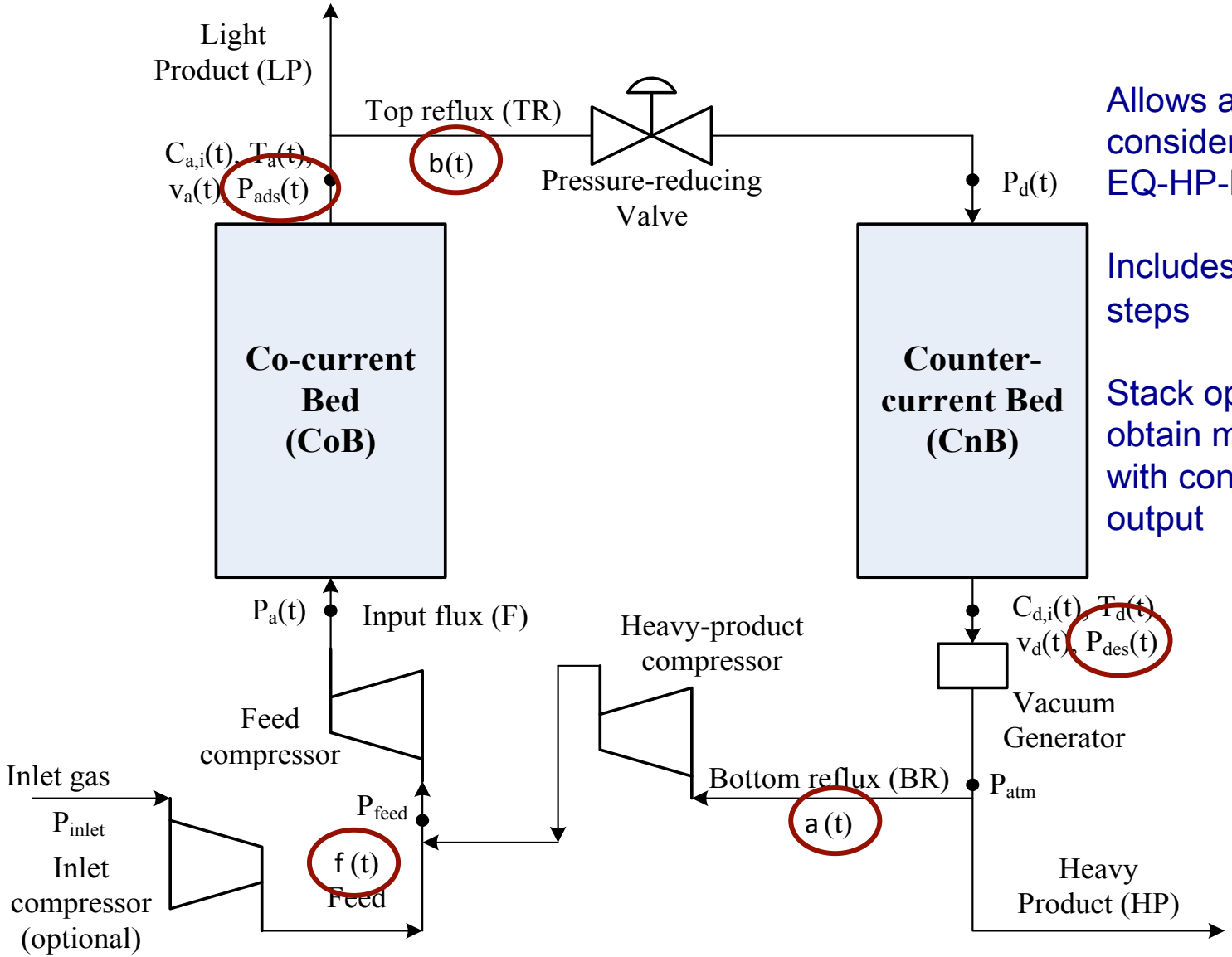

Allows all steps to be considered (P-FD-DP-EV-EQ-HP-LP)

Includes 2-bed interacting steps

Stack optimal profiles to obtain multi-bed systems with continuous feed and output

Jacobian of DAEs in Superstructure Model Binary Separation

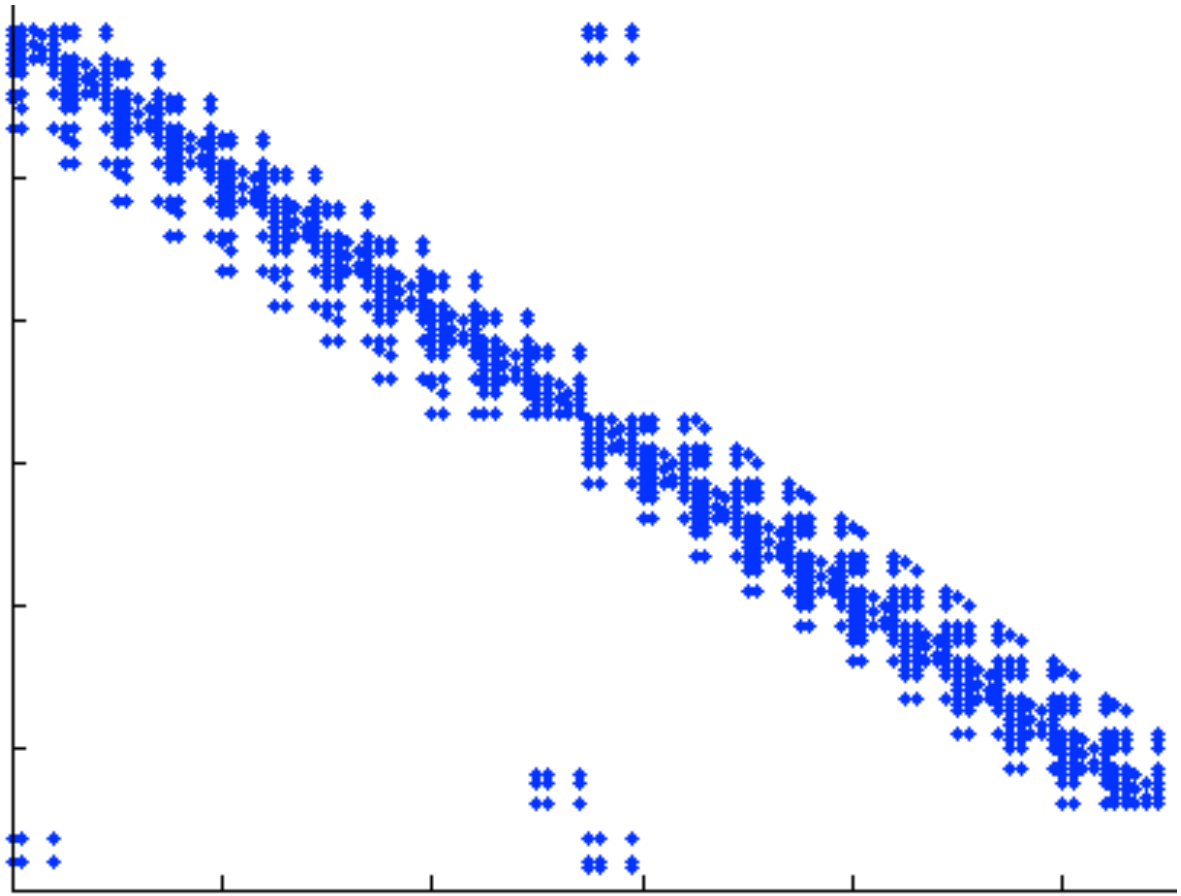

Finite Volume Discretization – smoothed flux limiters

Modeling/Designing Complex PSA Cycles

5 gases (N_2 ,CH_4, CO_2 ,CO, H_2)
5 beds, 11 steps
5 stages, 3 periods/stage
Dual-adsorbent layers (APHP, UOP 5A)

Uni-bed Simulation
Note: 2-bed interactions

Feed			EQ1	EQ2	Pr purge	EQ3	Blow down	Purge	EQ3	EQ2	Idle	EQ1	Repr.
EQ1	Repr.		Feed			EQ1	EQ2	Prpurge	EQ3	Blow down	Purge	EQ3	EQ2	Idle
EQ3	EQ2	Idle	EQ1	Repr.		Feed			EQ1	EQ2	Prpurge	EQ3	Blow down	Purge
EQ3	Blow down	Purge	EQ3	EQ2	Idle	EQ1	Repr.		Feed			EQ1	EQ2	Pr Purge
EQ1	EQ2	Prpurge	EQ3	Blow down	Purge	EQ3	EQ2	Idle	EQ1	Repr.		Feed		

Multi-bed Simulation

Minimize specific energy (kWh/tonne CO_2 captured)

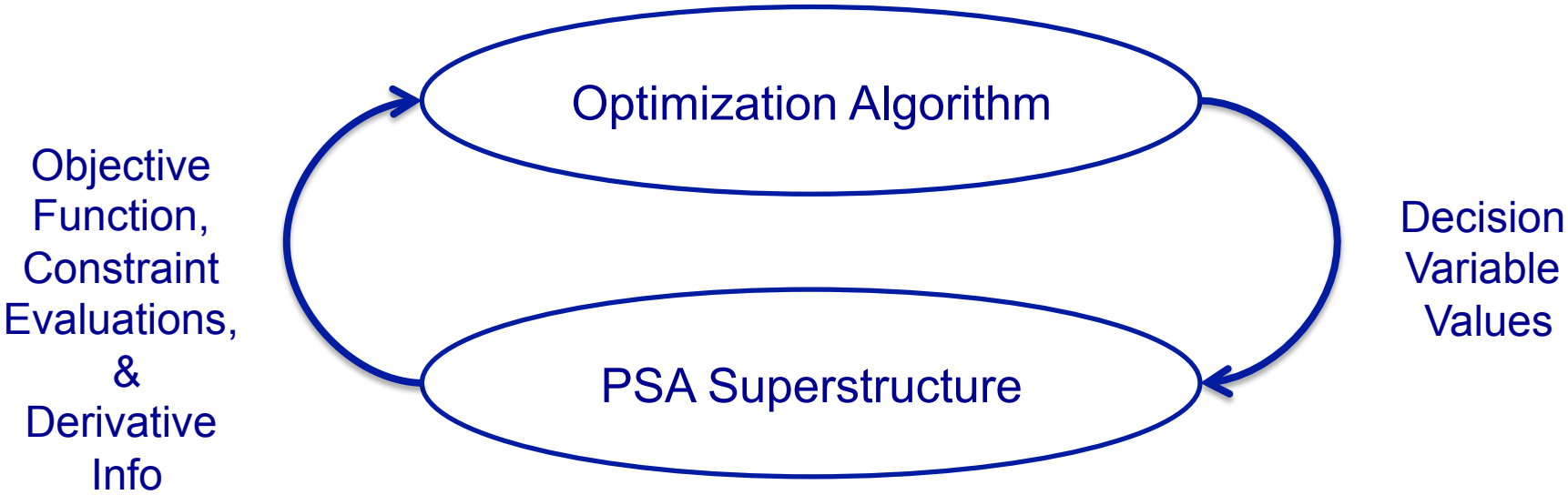

- PSA Bed Model
- Connectivity Equations
- Compressor and Turbine Model
- Valve Equations
- **Cyclic Steady-State Constraint**

3 approaches for cyclic-steady state (CSS)

- **Embeded fixed point (NDO)**
- **Fixed Horizon (Small NLP)**
- **Periodic BCs (Larger NLP)**

Implementation Details
(Existing Tools)

Formulation of Bed Equations

- Finite Volume Discretization of Bed Model (11 elements)
- Smoothed van Leer Flux Limiter
- States include gas concentration, solid loading, T, P, T_w

Integration of Bed Equations

- State equations solved with CVODES 2.6.0 (BDF, Sundials)
- Direct and adjoint sensitivity (no checkpointing in CVODES)
- Exact BDF Jacobian using ADOL-C

BOBYQA for Internal Fixed Point Form

- DFO code based on quadratic approximation to objective function
- Accommodates independent variable bounds
- Purity and Recovery constraints handled by l_2 penalty functions

IPOPT 3.10 for gradient formulations (equality constrained, finite horizon)

- First derivatives from sensitivity equations
- Second derivatives approximated with LBFGS

Minimize Power for Pre-combustion Capture
(Dowling, Vetukuri, B., 2012)

Min Total Power (kWh/tonne CO_2)
CO_2 purity ≥ 0.92
CO_2 recovery ≥ 0.90
a(t), b(t), f(t) ε [0, 1]
$P_{ads} \geq 5$ bar
$P_{des} \geq 10^{-4}$ bar
$P_{ads} \geq P_d$
$P_a \geq P_{des}$
$P_{feed} \geq P_{des}$
(CSS constraints)

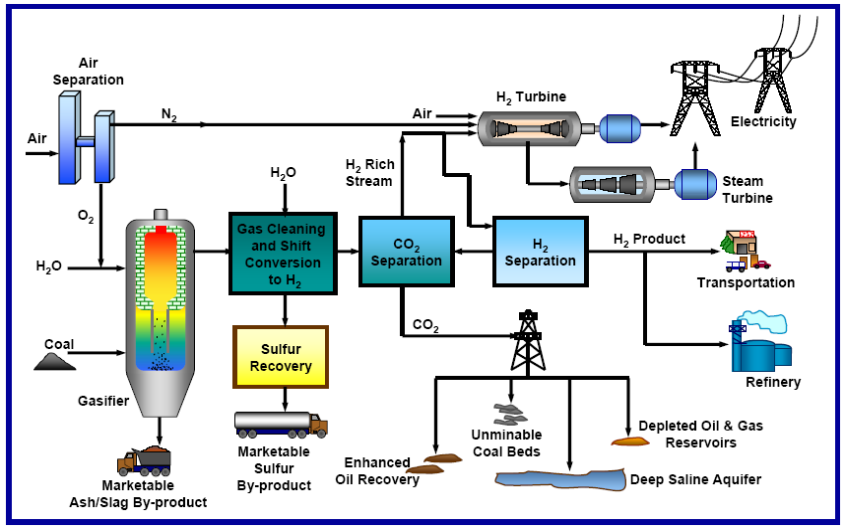

Adsorbent: Activated Carbon
Feed: H_2 (58%) and CO_2 (42%)
Feed: H_2 (56.5%), CO_2 (42%), CO(0.8%), CH_4(0.6%), N_2(trace)
P_{feed}: 51 bar, T_{feed}: 308 K
P_{out} for H_2 Product: 31 bar
P_{out} for CO_2 Product: 150 bar

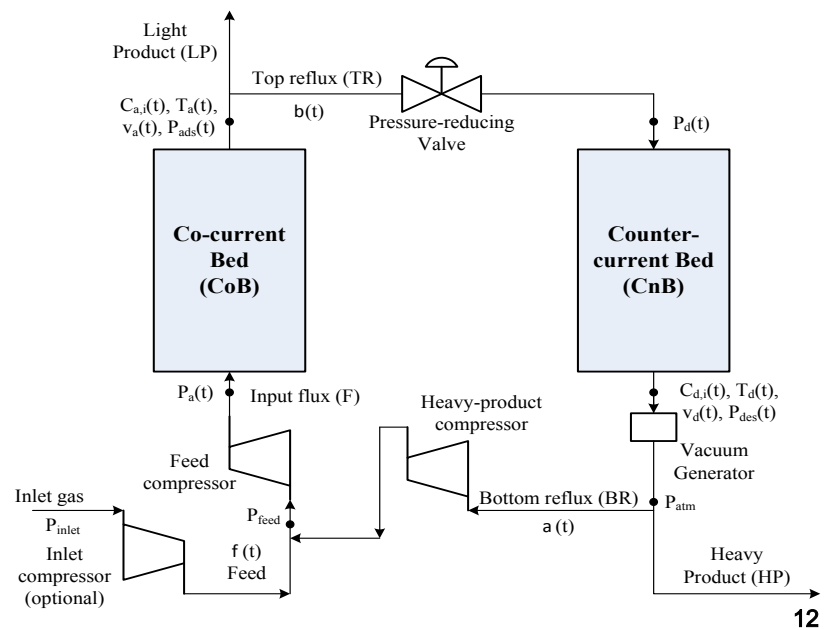

Designed Pre-Combustion Cycle

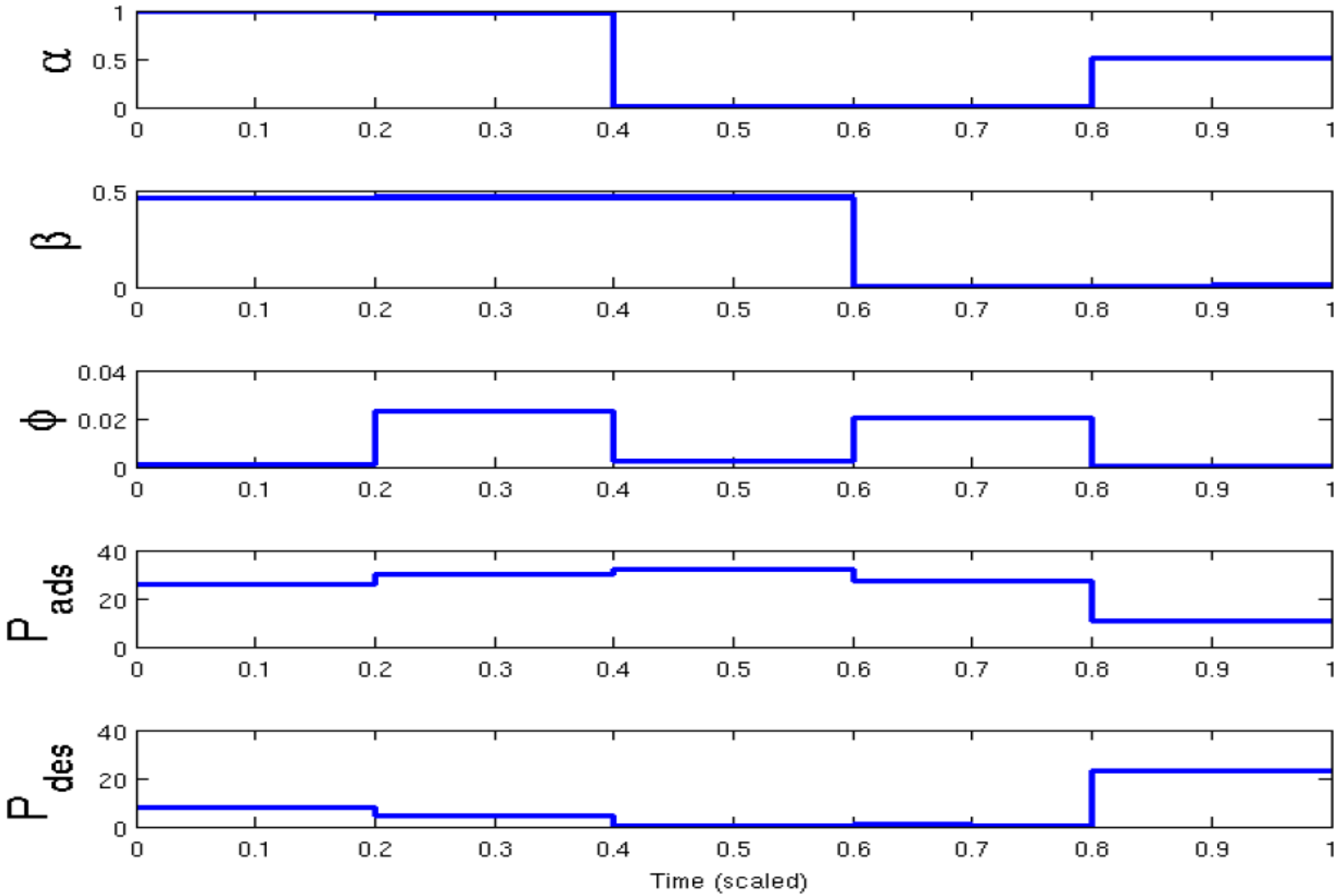

86.8 kWh/tonne CO_2 captured

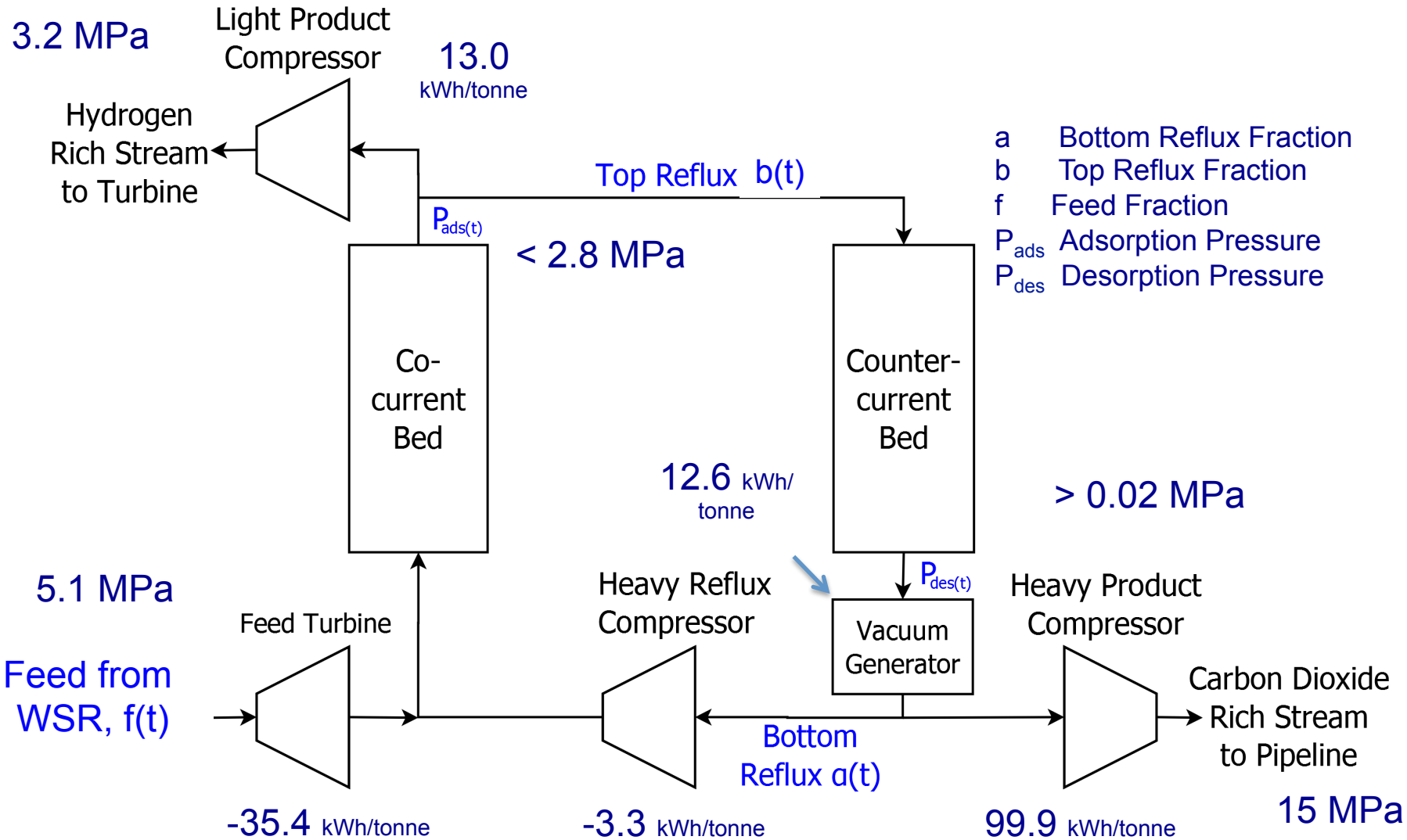

Computational Performance

Part A: Binary System (CO_2, H_2)

Approach	Obj. Func $kWh/tonne\ CO_2$	CPU Time/Iter $h{:}mm{:}ss$	Iter
Periodic Bnd. Cnd. (1)	83.51	0:10:37	82
Fixed Horizon (3)	86.46	0:21:09	56

Part B: Five Components (CO_2, H_2, CH_4, N_2, CO)

Approach	Obj. Func $kWh/tonne\ CO_2$	CPU Time/Iter $h{:}mm{:}ss$	Iter
Periodic Bnd. Cnd. (1)	89.37	1:00:15	470
Derivative Free (2)	109.04	0:11:29	2500+
Fixed Horizon (3)	86.81	1:27:52	260

Multiple common starting points

Internal Fixed Point approach terminates at infeasible solution

- Local minima, effect of noise, poor scaling

Derivative based approaches: KKT conditions not always satisfied

- Terminate due to resource limits, accumulation points
- Noisy first derivatives, approximate (L-BFGS) second derivatives

PSA Optimization Conclusions

- Compared three PSA optimization formulation
- Developed novel application of adjoint sensitivity equations to PSA optimization
- Demonstrated potential cost competitiveness of PSA for H_2-CO_2 separation in IGCC power plant with an *activated carbon sorbent*