Superstructure-based Simultaneous Optimization of Heat and Water Integration

Linlin Yang
Advisor: Ignacio E. Grossmann

Department of Chemical Engineering
Carnegie Mellon University
Pittsburgh, PA 15213

March 6th , 2011

Carnegie Mellon

Motivation

Water and energy are important resources in the process industries

Water issues	Energy issues
Rapidly growing demand for freshwater	Steadily growing demand for energy

Goal

To determine the flowsheet configuration and operating conditions that achieves optimal water and energy use to minimize cost

<u>Two essential steps:</u>

1. **Determine the minimum freshwater flowrate (target) required for a given set of water-using units**
   - **Challenges:**
     1. **Multi-contaminant water stream integration**
     2. **Realistic wastewater system**

2. **Perform simultaneous optimization on heat and water integration of a process flowsheet**
   - **Note: only process flowsheet and HENS optimization has been performed *(Duran and Grossmann, 1986)***

Why simultaneous optimization?

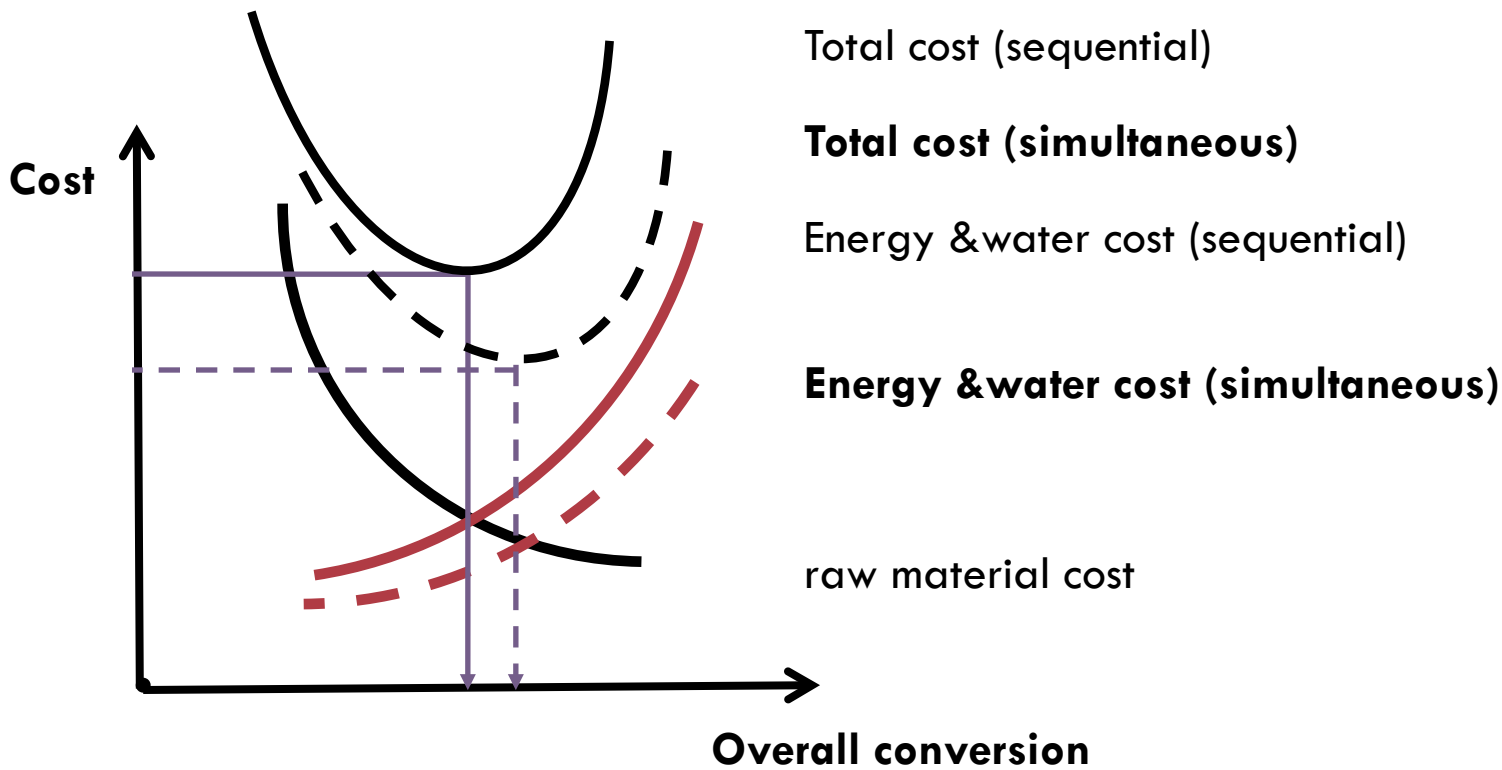

Advantage

- Captures tradeoffs among raw material, investment cost and operating cost

Targeting approach

Determine a performance index ahead of detailed design of system configuration

Examples:

- Heat-exchanger network: heating and cooling utilities
- Water network: freshwater flowrate
- Distillation sequencing: recovery ratio

Advantages:

- Avoiding combinatorial problems
- Reduces problem dimensionality to a manageable size
- Offers insights into the system performance and characteristics

Levels of model complexity

Aggregated model (LP/NLP/MILP)

- e.g. Utility level
  - **Transshipment model HENS/MENS** *(Papoulias, Grossmann, 1983; El-Halwagi, Maniousiouthakis, 1989)*
  - **Distillation Sequences** *(Papalexandri, Pistikopoulos, 1996; Caballero, Grossmann, 1999)*
  - **Reactor networks** *(Balakrishna, Biegler, 1992; Kravanja, Bedenik, Pahor, 2003)*

Short-cut model (NLP/MINLP)

- e.g. Cost optimization
  - **HENS:** *(Yee at al., 1990; Ciric and Floudas, 1991)*
  - **Distillation sequences**: *(Aggrawal, and Floudas, 1990; Yeomans and Grossmann, 1998)*
  - **Process flowsheets:** *(Kocis and Grossmann, 1989; Türkay and Grossmann, 1996; Lee et al, 2003)*

Rigorous model (NLP/MINLP)

- e.g. Unit performance
  - **Synthesis of distillation sequences** *Bauer, Stichlmair (1996,1998), Smith and Pantelides (1995), Yeomans, Grossmann (2000), Barttfeld, Aguirre, Grossmann (2004), Caballero, Milan-Yanez ,Grossmann (2005)*

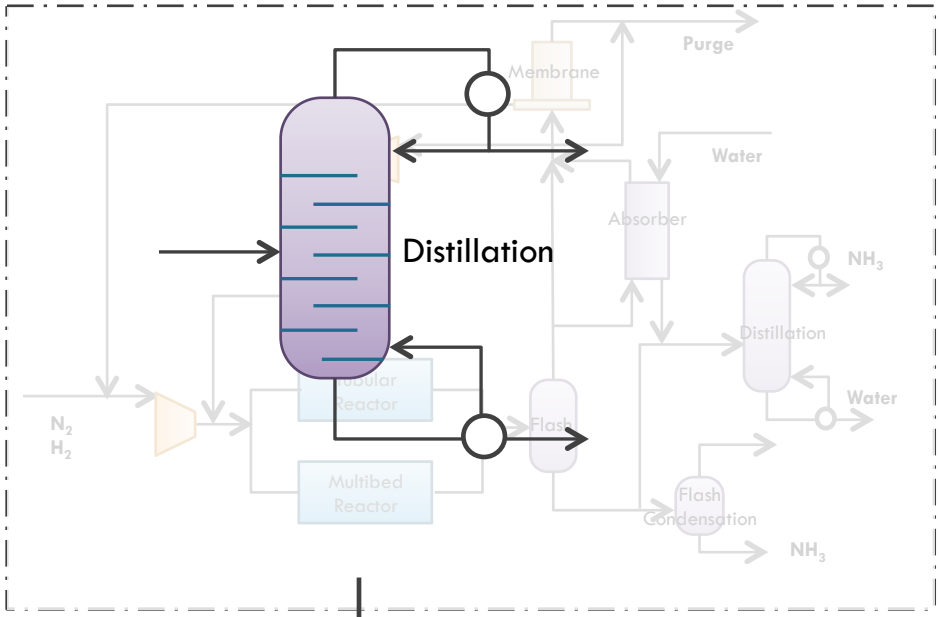

Minimum utility requirement

Not all models require a great amount of details!

Simultaneous flowsheet, heat, and water integration

Path 0: Unrealistic

Path 1: Optimal solution (simultaneous optimization; MINLP)

Path 2: Can we avoid solving that MINLP but still get to the same optimal solution?

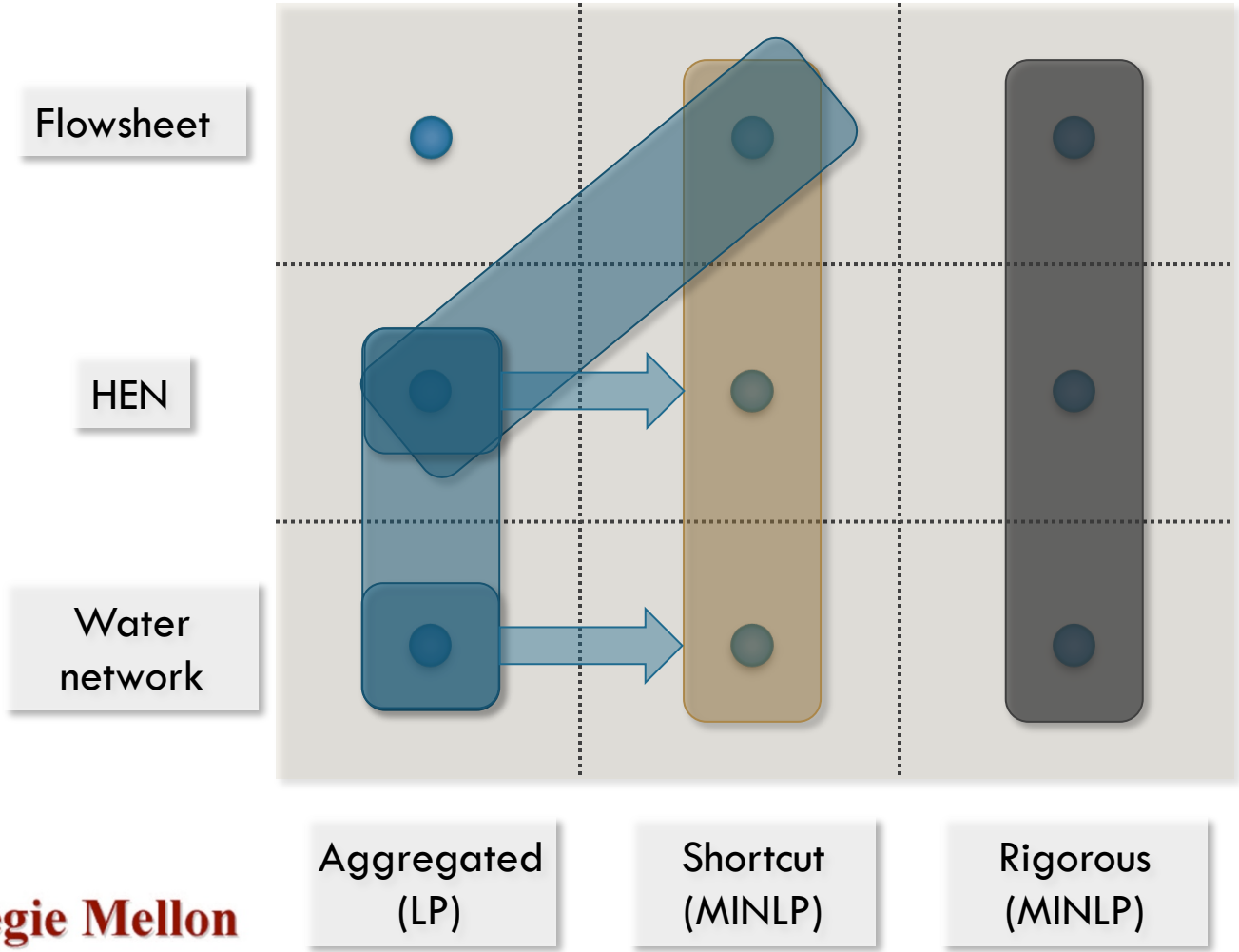

Proposed strategy – simultaneous integration

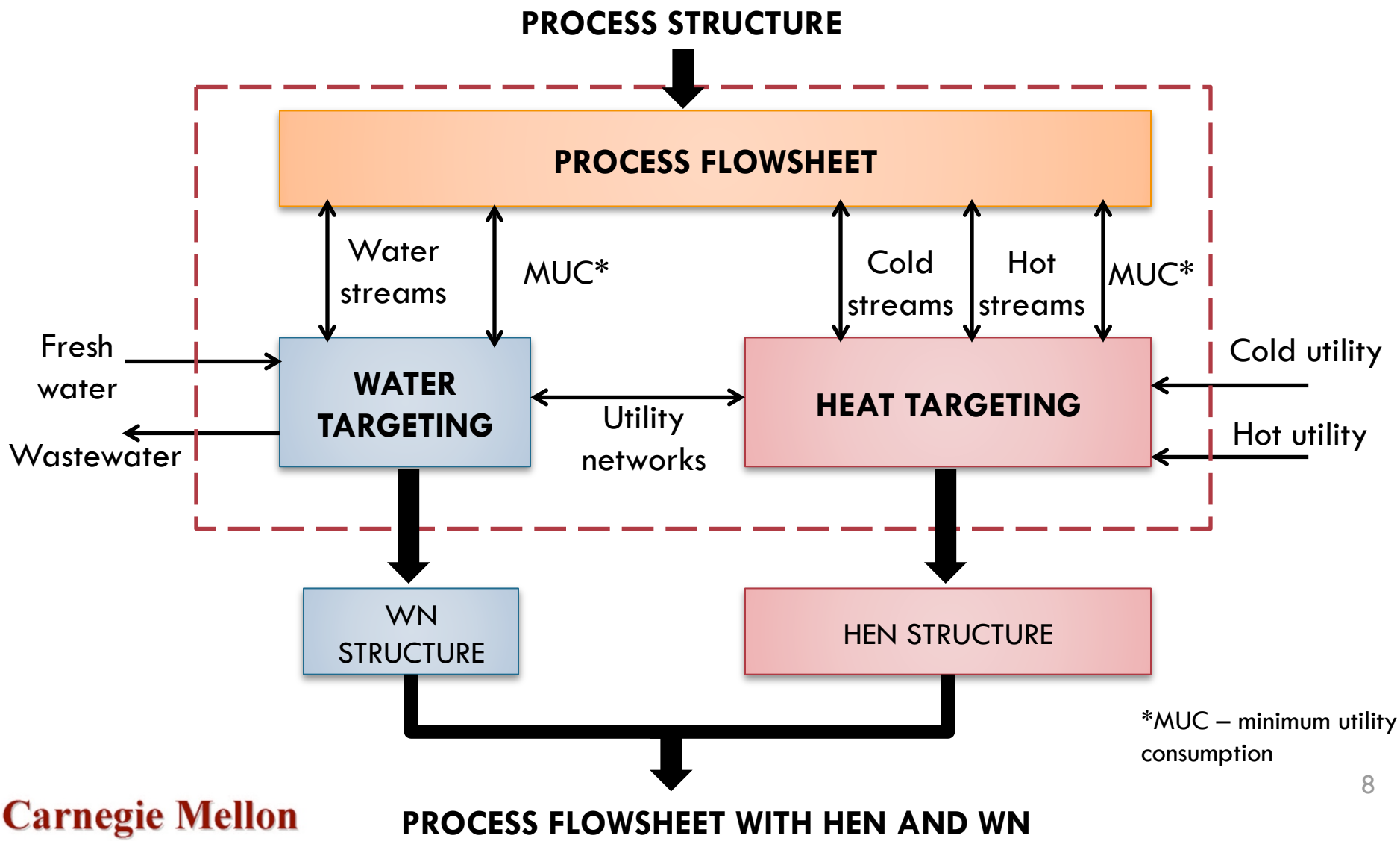

*MUC – minimum utility consumption

Heat Integration – Targeting strategy

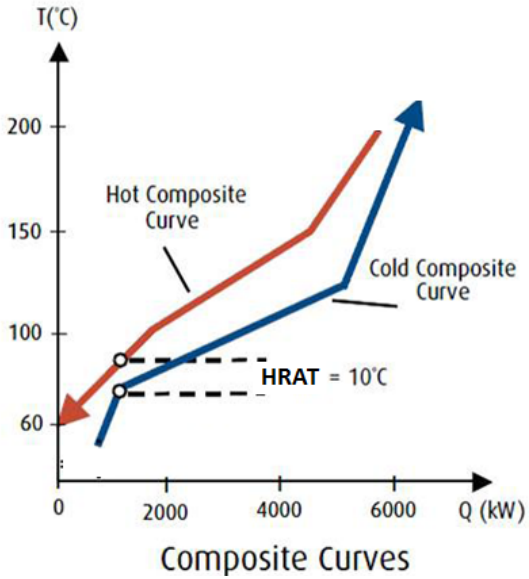

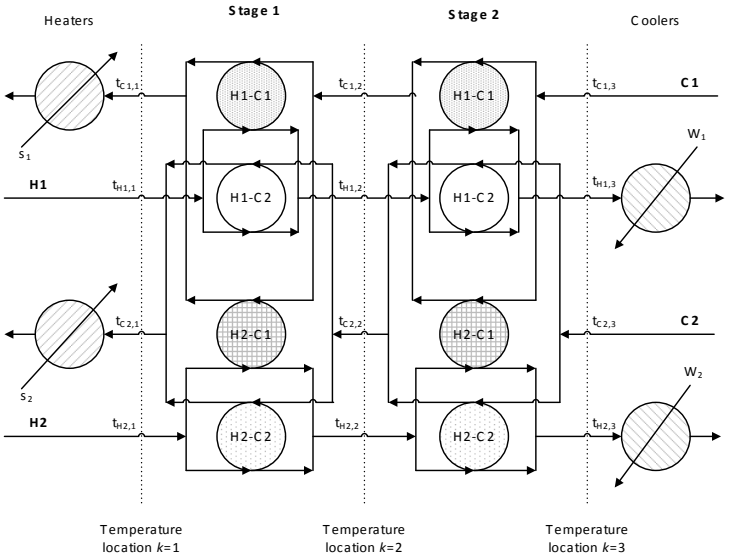

Conventional Water Network

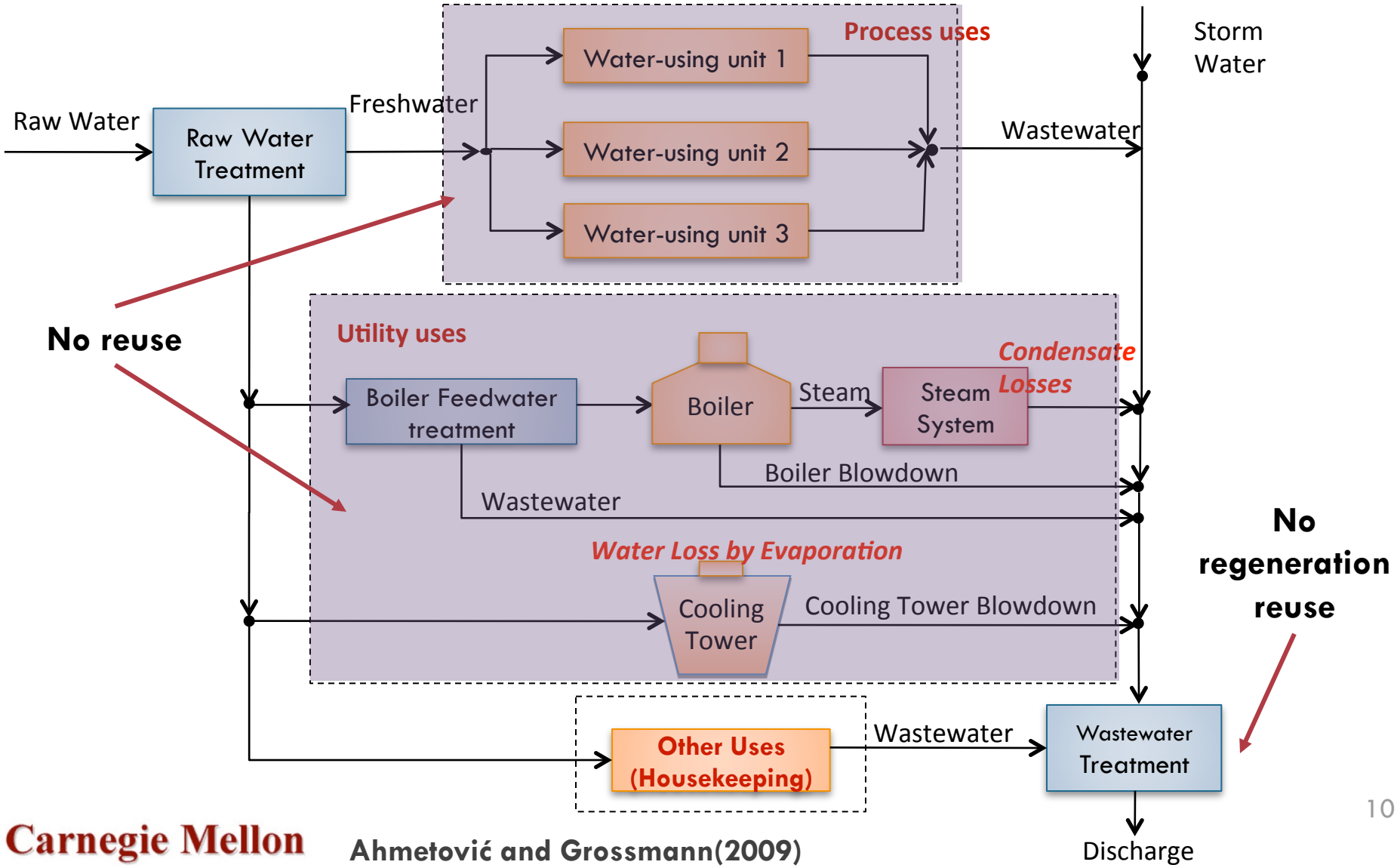

Ahmetović and Grossmann(2009)

Water Integration – Targeting strategy

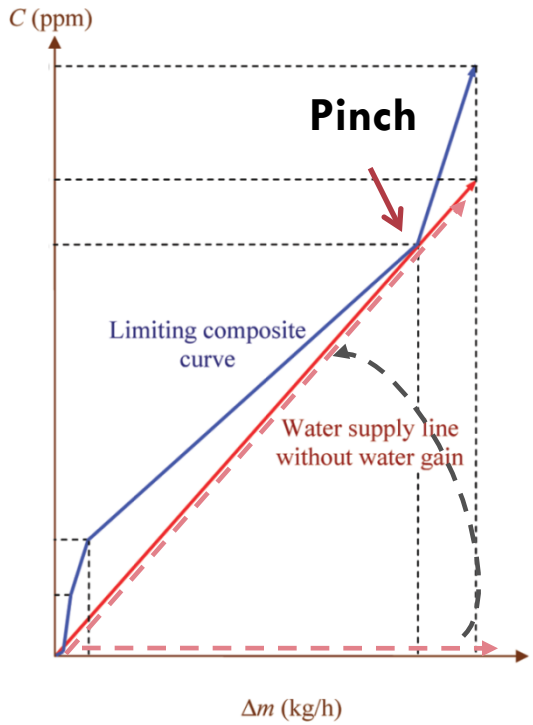

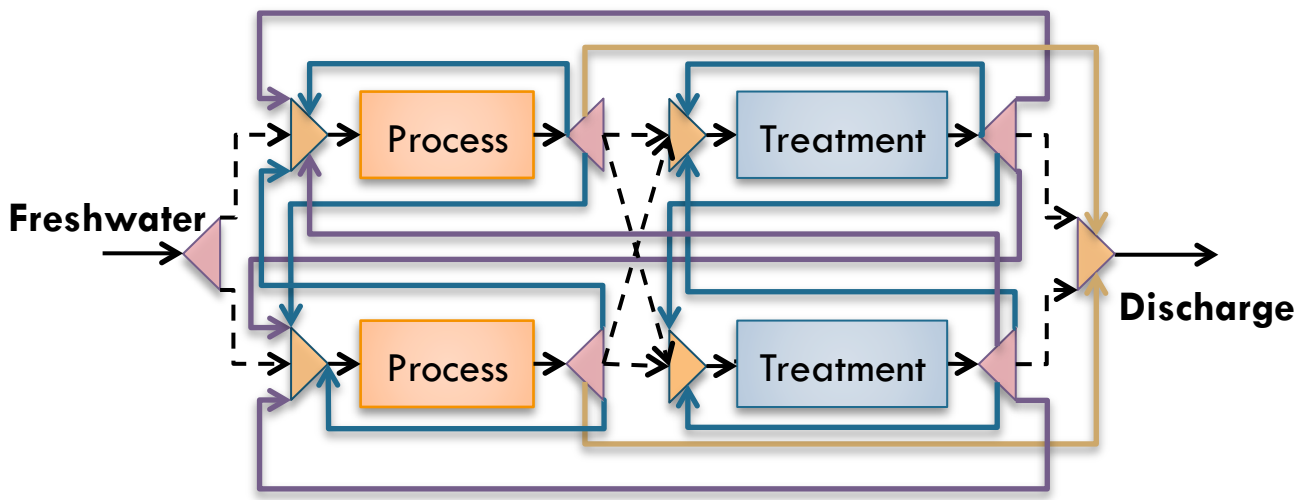

Proposed work - freshwater targeting

Relax nonlinear WN formulation into linear formulation

- **Necessary condition of optimality** (Savelski and Bagajewicz,2003)
  "If a system is optimum, freshwater user processes have at least one component reaching its maximum concentration."
- **The proposed LP model predicts the EXACT target for minimum freshwater consumption of a set of water-using processes**
  - Does not provide the network structure
  - Accounts for process units that have water loss / gain
  - No treatment unit included

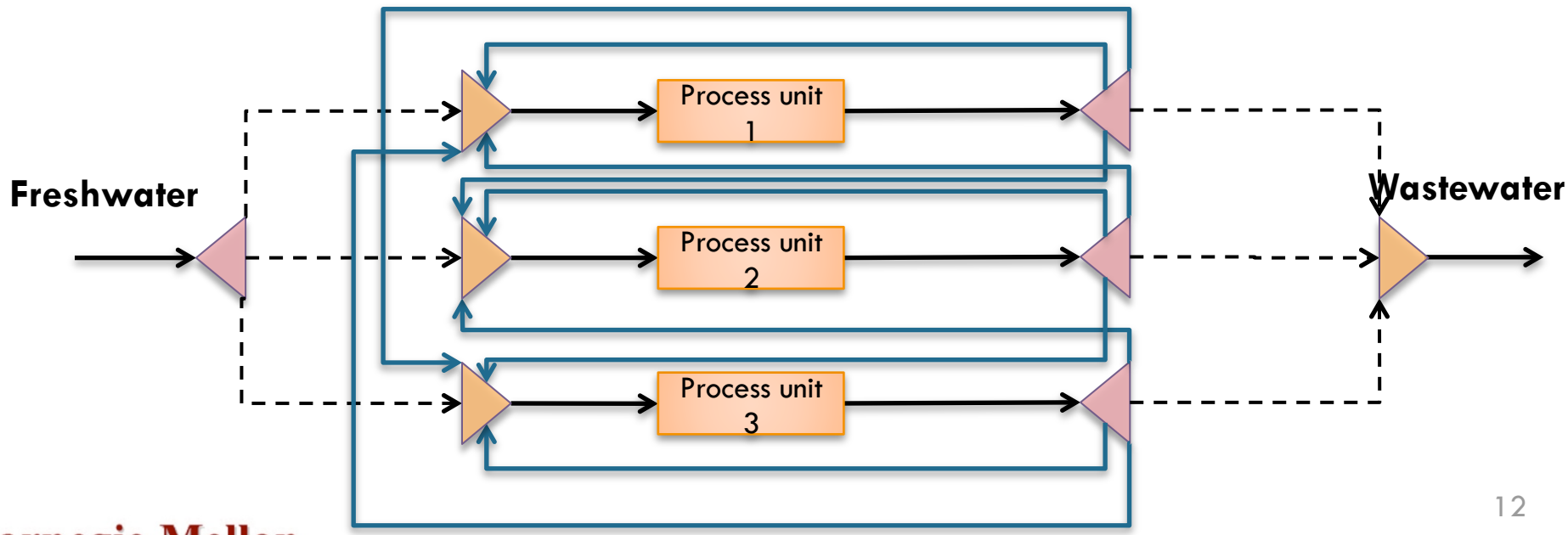

Simultaneous optimization - example

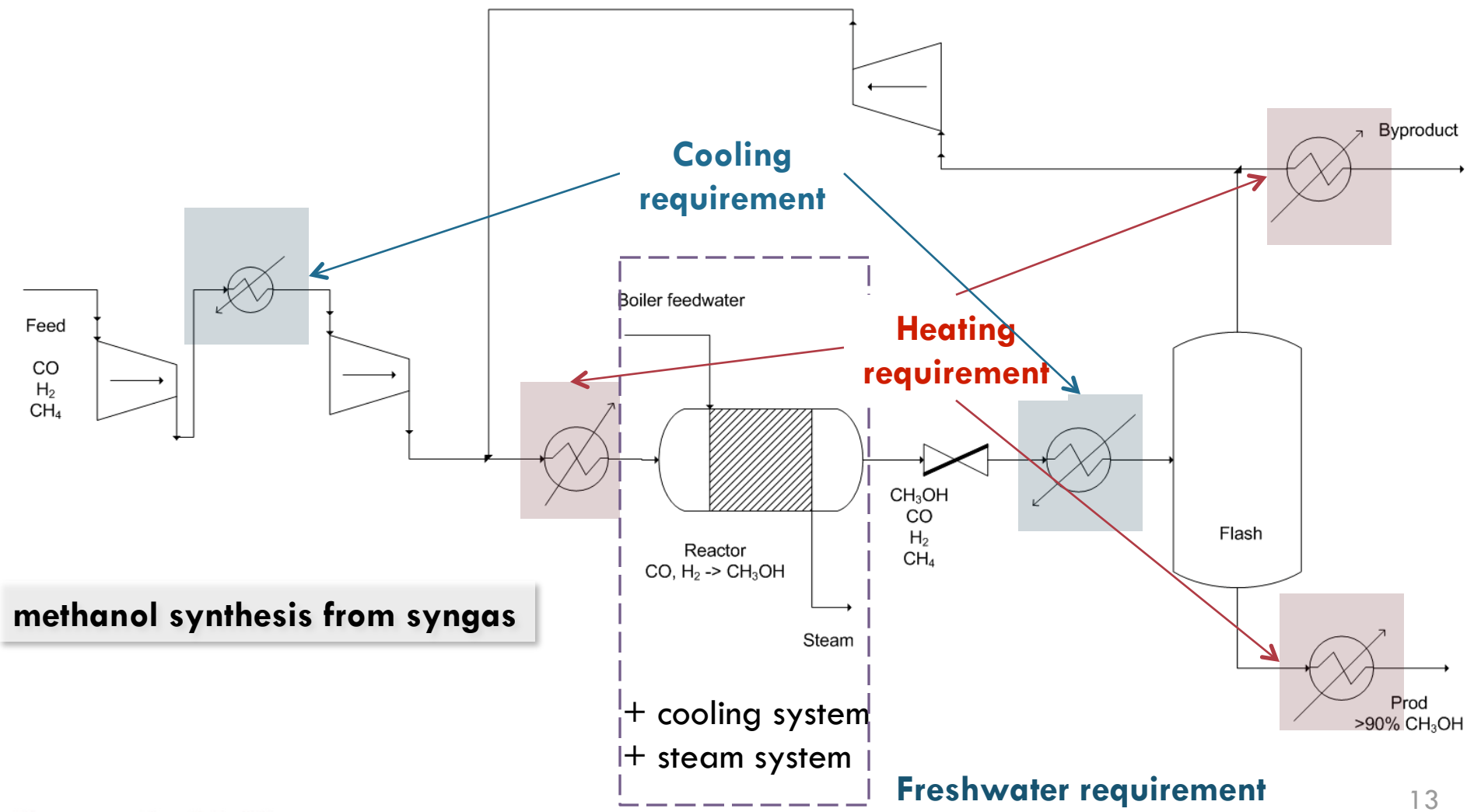

methanol synthesis from syngas

Duran & Grossmann (1986); Turkay & Grossmann (1998)

Preliminary results – sequential vs. simultaneous comparison

		SEQUENTIAL	SIMULTANEOUS
Profit	**(1000 $/yr)**	**62,695**	**73,416**
Investment cost	**(1000 $)**	1,891	1,174
Operating costs and parameters			
	electricity (KW)	6.59	1.84
	freshwater (kmol/s)	202.4	162.5
	heating utility (10^9 KJ/yr)	0.29	0
	cooling utility (10^9 KJ/yr)	67.3	72.7
	Steam generated (10^9 kJ/yr)	2448	1965
	overall conversion	0.23	0.29
Material flowrate (10^6 kmol/yr)			
	feedstock	48.04	37.13
	product	10.89	10.89
	byproduct	9.95	4.41

Solved with BARON

17% improvement

Conclusion and future work

Conclusions:

- Developed water targeting formulation for water using units excluding treatment units
- Developed targeting strategy for solving simultaneous flowsheet, heat and water integration
  - Captures tradeoffs between capital and operating costs

Future work:

- Water network
  - Non-isothermal water network
  - Include wastewater treatment units

Thank you!

Heat Integration for PC Power Plant with CO_2 Capture

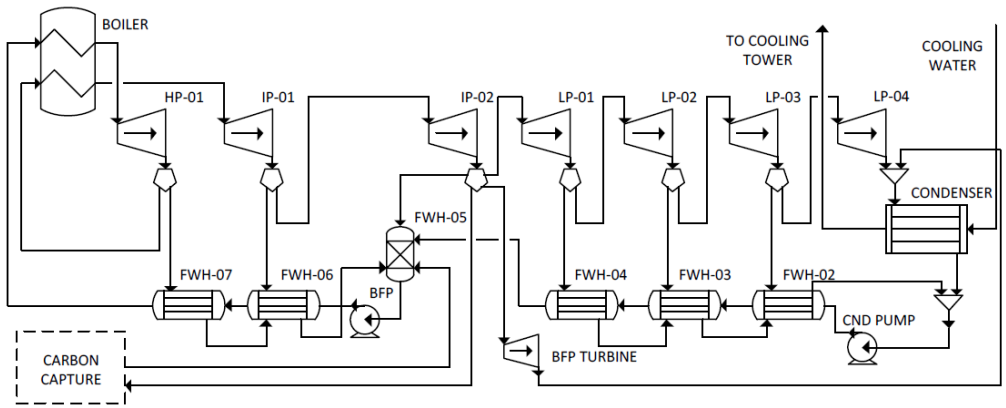

Steam cycle

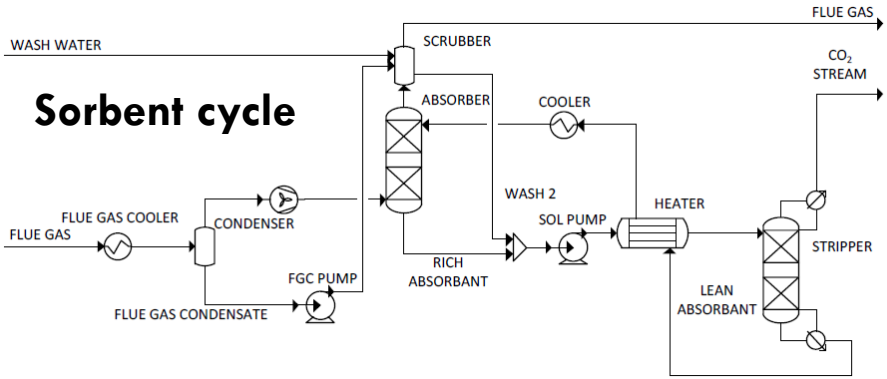

Sorbent cycle

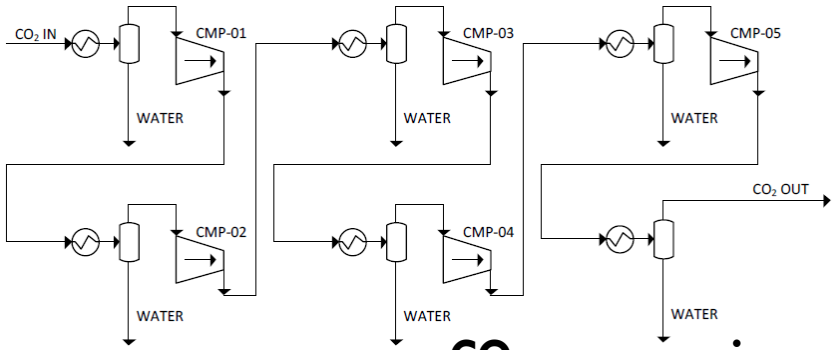

CO_2 compression

Question: how to integrate the system to minimize power loss due to CO_2 capture?

Heat Integration for PC Power Plant with CO_2 Capture

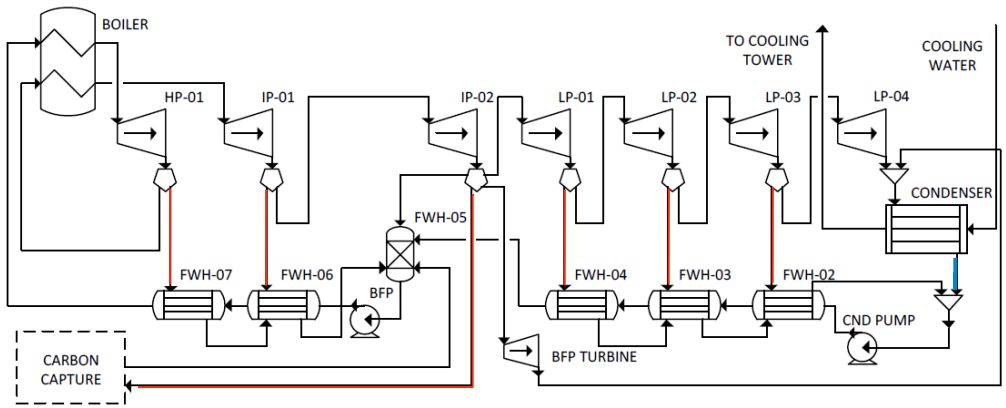

Steam cycle

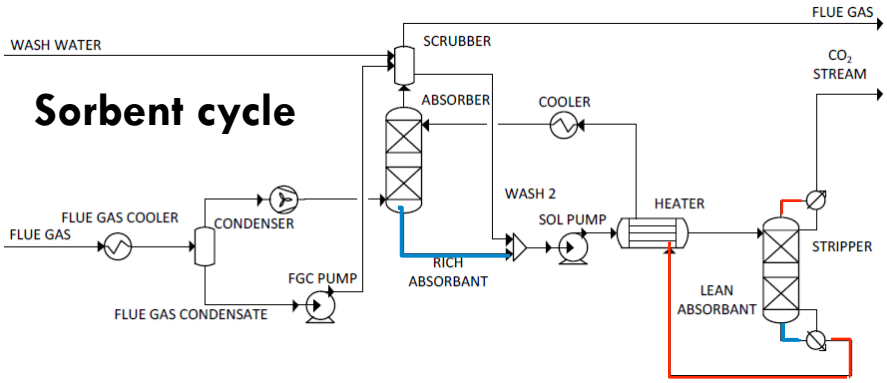

Sorbent cycle

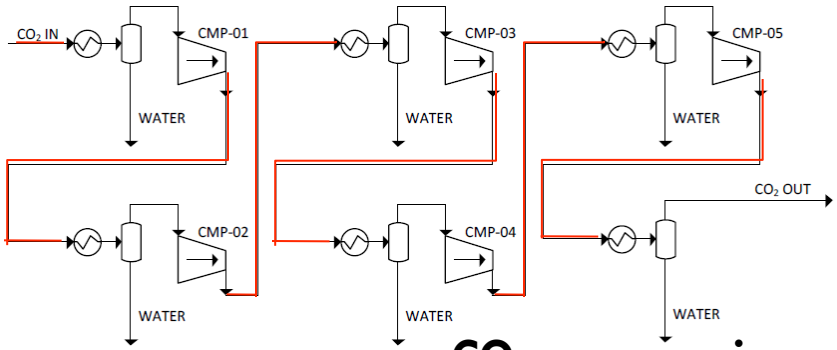

CO_2 compression

T-Q Curve (original design)

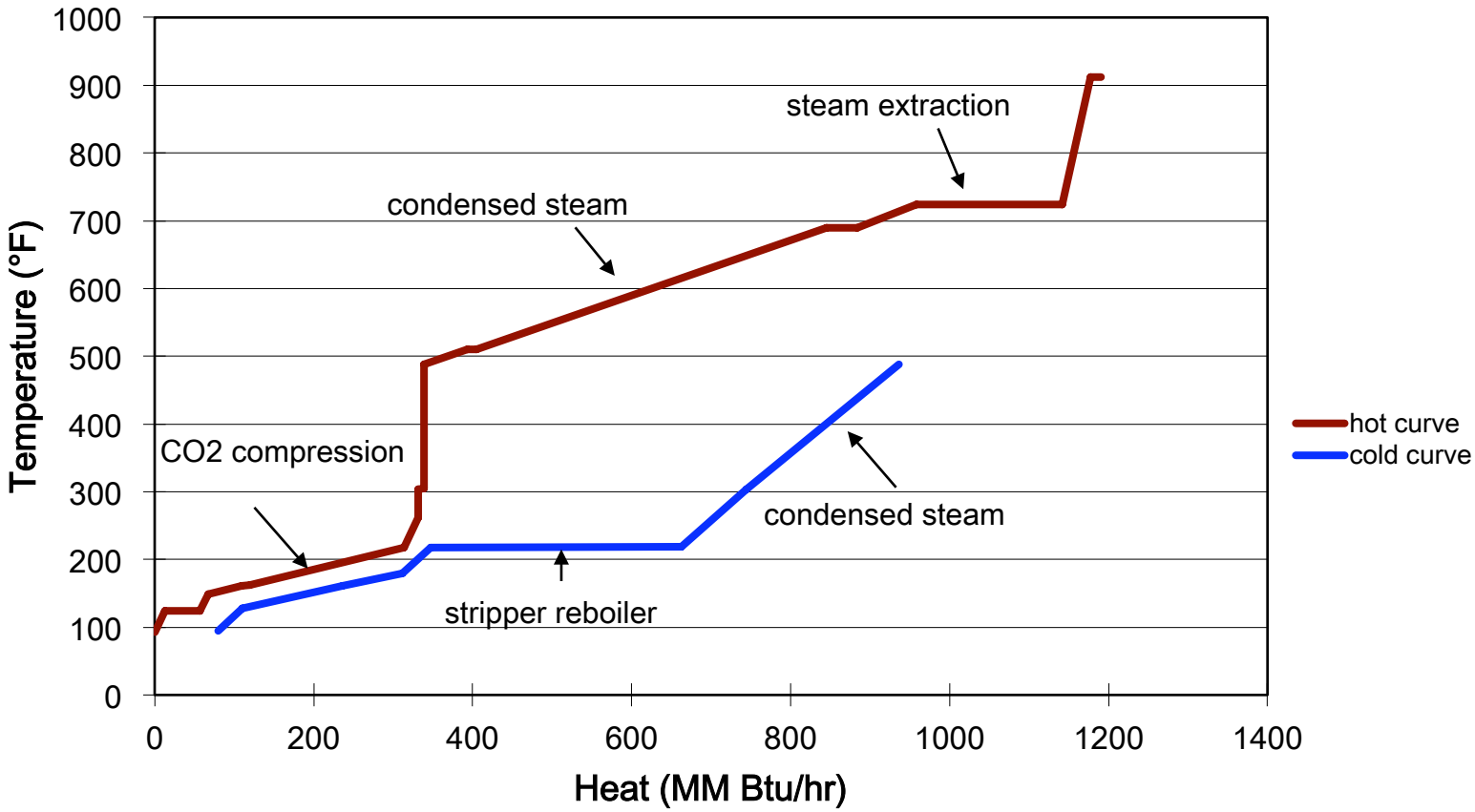

HRAT = 18°F

T-Q Curve (optimized design)

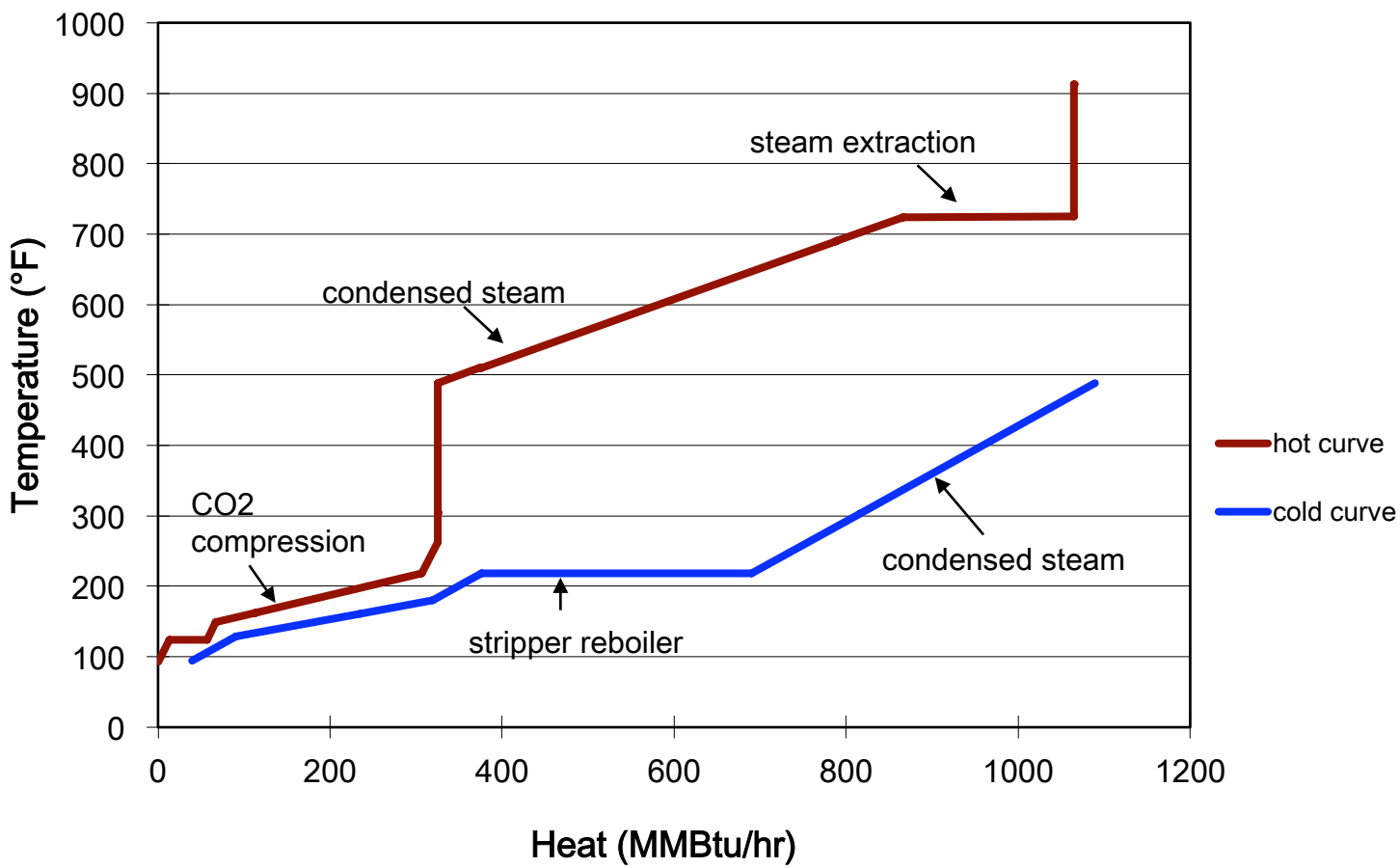

HRAT = 18°F

Heat Exchange Network

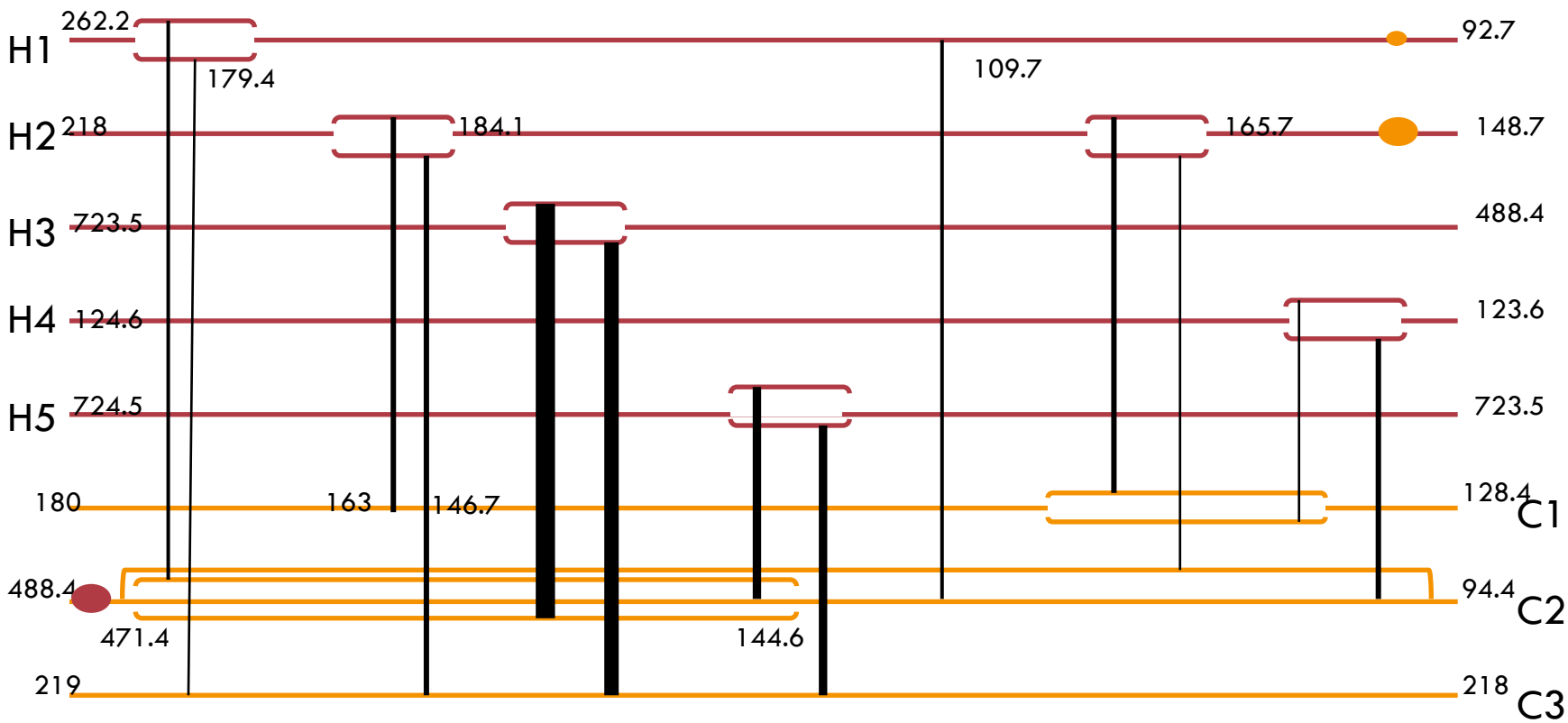

H1 - CO2 compression streams
H2 - stripper to absorber
H3 – condensed steam extract IP-02
H4 - stripper condenser
H5 – condensing steam extract IP-02

C1 - absorber to stripper
C2 – boiler feed water
C3 - stripper reboiler

Reference

Heat integration:

Duran, M. A.; Grossmann, I. E. Simultaneous Optimization and Heat Integration of Chemical Processes. *AIChE J.* 1986, *32 (1), 123-138.*

Floudas, C.A. *Nonlinear and Mixed-Integer Optimization: Fundamentals and Applications.* Oxford University Press, 1995.

Furman, K.C.; Sahinidis, N. A Critical Review and Annotated Bibliography for Heat Exchanger Network Synthesis in the 20th Century. *Ind. Eng. Chem. Res. 2002, 41, 2335-2370.*

Gundersen, T.; Naess, L. The Synthesis of Cost Optimal Heat Exchanger Networks. *Comput. Chem. Eng. 1988, 12 (6),* 503-530.

Ježowski, J. Heat Exchanger Network Grassroot and Retrofit Design. The Review of the State-of-the-Art: Part I. Heat Exchanger Network Targeting and Insight Based Methods of Synthesis. *Hung. J. Ind. Chem. 1994, 22, 279-294.*

Papoulias, S. A.; Grossmann, I. E. A Structural Optimization Approach in Process SynthesissII. Heat Recovery Networks. *Comput. Chem. Eng. 1983, 7 (6), 707-721.*

Water integration:

Ahmetović, E.; Grossmann, I. E. Global superstructure optimization for the design of integrated process water networks. AIChE Journal. 2010

Ahmetović, E.; Martín, M.; Grossmann, I.E. Optimization of Energy and Water Consumption in Corn-Based Ethanol Plants. *Ind. Eng. Chem. Res. 2010.*

Bagajewicz, M.J. A review of recent design procedures for water networks in refineries and process plants.*Comput.Chem. Eng.2000,24,2093-2113.*

Foo, D.C.Y. State-of-the-art review of pinch analysis techniques for water network synthesis. *Ind. Eng. Chem. Res.* 2009, *48, 5125-5159.*

Ježowski , J. Review of Water Network Design Methods with Literature Annotations. *Ind. Eng. Chem. Res. 2010, 49, 4475–4516.*

Karuppiah, R.; Grossmann, I. E. Global optimization for the synthesis of integrated water systems in chemical processes. *Comput. Chem. Eng. 2006, 30, 650-673.*

Mann JG, Liu YA. *Industrial Water Reuse and Wastewater Minimization.* New York: McGraw-Hill, 1999.

Savelski, M. J.; Bagajewicz, M. J. On the necessary conditions of optimality of water utilization systems in process plants with multiple contaminants. *Chem. Eng. Sci.* 2003, *58 (23-24), 5349-5362.*

Wang, Y.-P.; Smith, R. Wastewater minimization. *Chem. Eng. Sci. 1994, 49 (7), 981-1006.*

Others:

NETL. EXISTING PLANTS PROGRAM: ENERGY – WATER R&D Technology Roadmap & Program Plan. 2009.

Turkay, M.; Grossmann, I.E. Structural flowsheet optimization with complex investment cost functions. *Comput. Chem. Eng.* 1998, 22, 673-686.

Water Usage in PC Power Plant

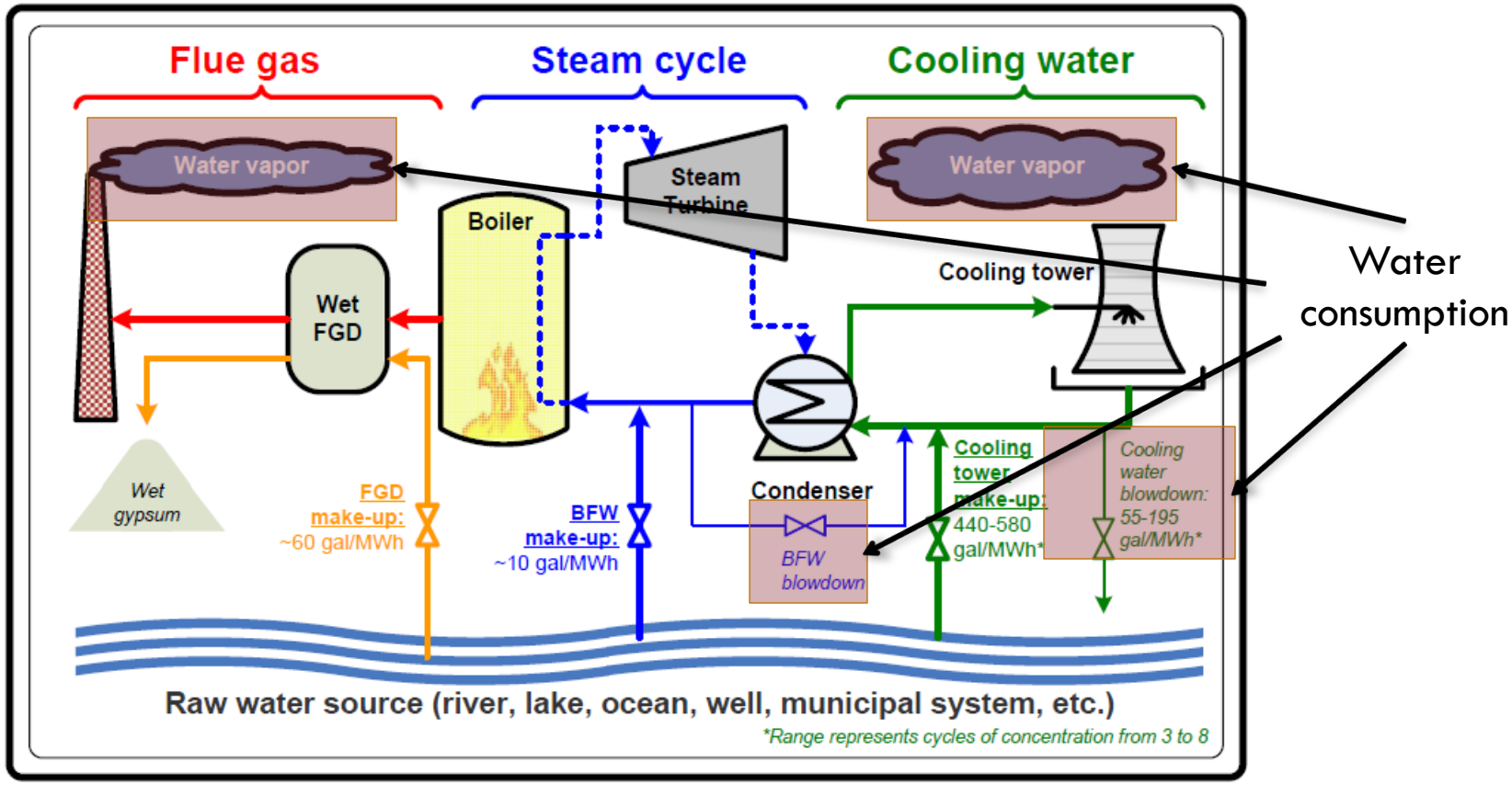

Figure 3-3. Water flow schematic for a greenfield supercritical pulverized coal power plant utilizing a wet cooling tower and a wet FGD

NETL – "Water Requirements for Existing and Emerging Thermoelectric Plant Technologies "

Water network – problem statement

Given

- A set of freshwater sources with/without contaminants
- A set of water-using operations units and their inlet/outlet maximum concentration level for contaminants
- A set of wastewater treatment units
- Maximum discharge contaminant concentrations

Determine

- Optimal water network

Minimize

- Freshwater consumption
- Annual cost of water network

Water targeting – pinch method for single contaminant system

Past works

- El-Halwagi and Manousiouthakis (1989)
- Wang and Smith (1994)

Comparison with heat pinch analysis

Similarities:

- Heat pinch: heat load
  Water pinch: mass load
- Heat pinch: Heating/cooling utilities
  Water pinch: freshwater/wastewater flowrates

Differences:

- Heat pinch: transfers heat only
- Water pinch: transfers MULTIPLE contaminants
  - Solution not rigorous

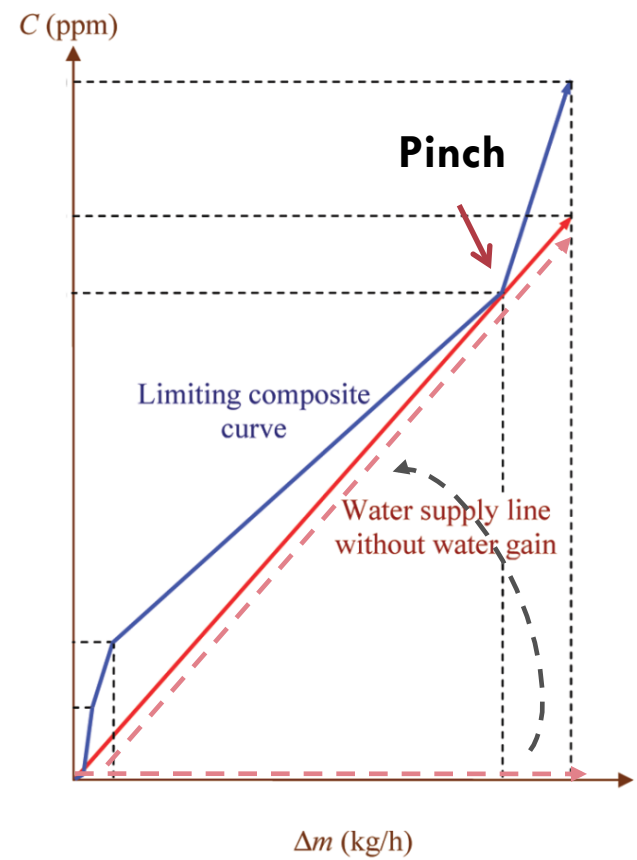

Need to find other method for freshwater targeting

WN – superstructure-based method

Karuppiah and G. (2006); Ahmetović and G. (2009)

- Integrated water network with reuse, recycle, and regeneration schemes
- Constraints and objective functions are **nonconvex**
- Can determine **global optimal** solution with branch and bound algorithm

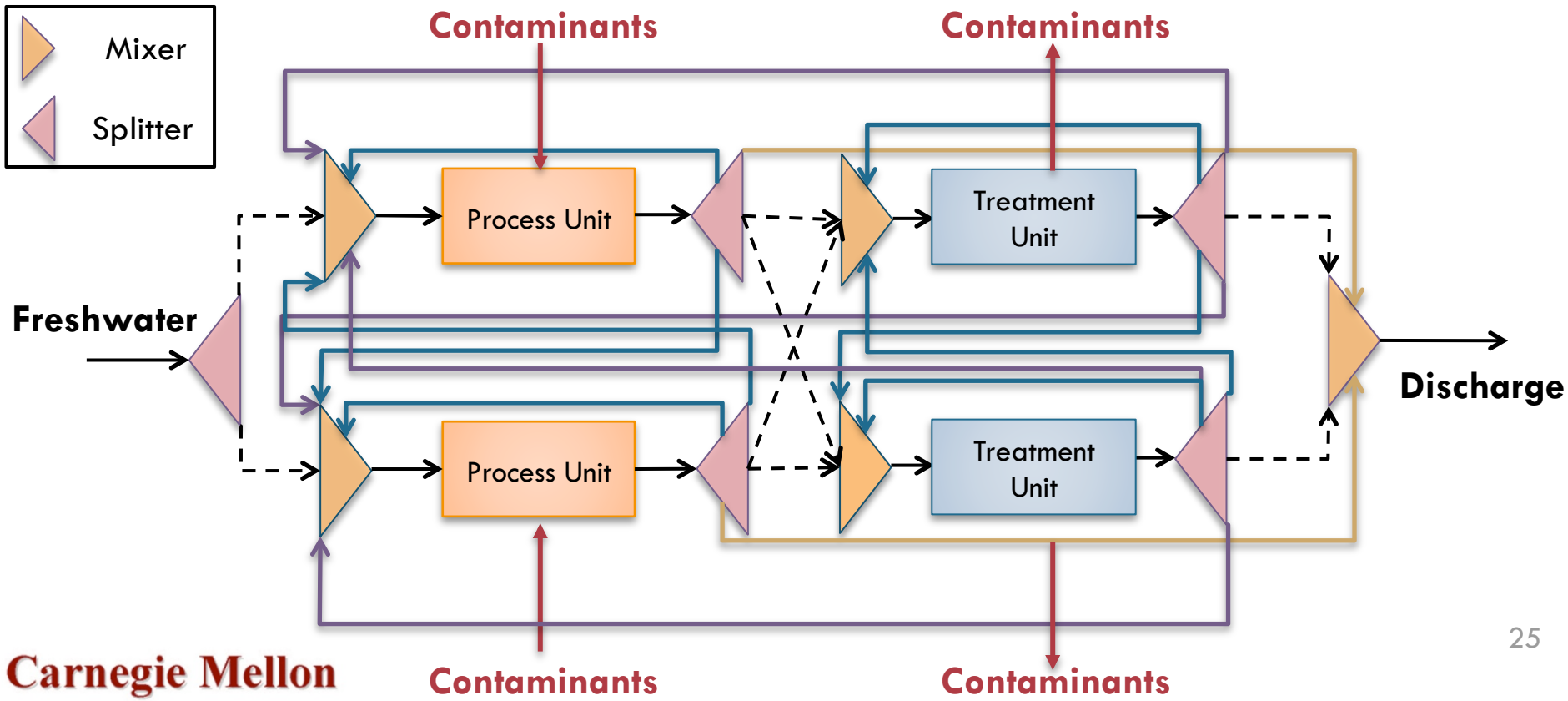

HEN – problem statement

Given

- A set of hot process streams to be cooled
- A set of cold process streams to be heated
- Available utilities and their costs
- Heat recovery approach temperature (HRAT)

Determine

- Network configuration

Minimize

- Heating utility required
- Cooling utility required
- Investment cost of heat exchanger units

HEN – stage-wise superstructure

Yee and Grossmann(1990)

Objective Function

- Min capital and utility costs

Constraints

- Overall energy balance for each stream
- Energy balance for each stage
- Heating and cooling duties
- Logical constraints
- Temperatures differences

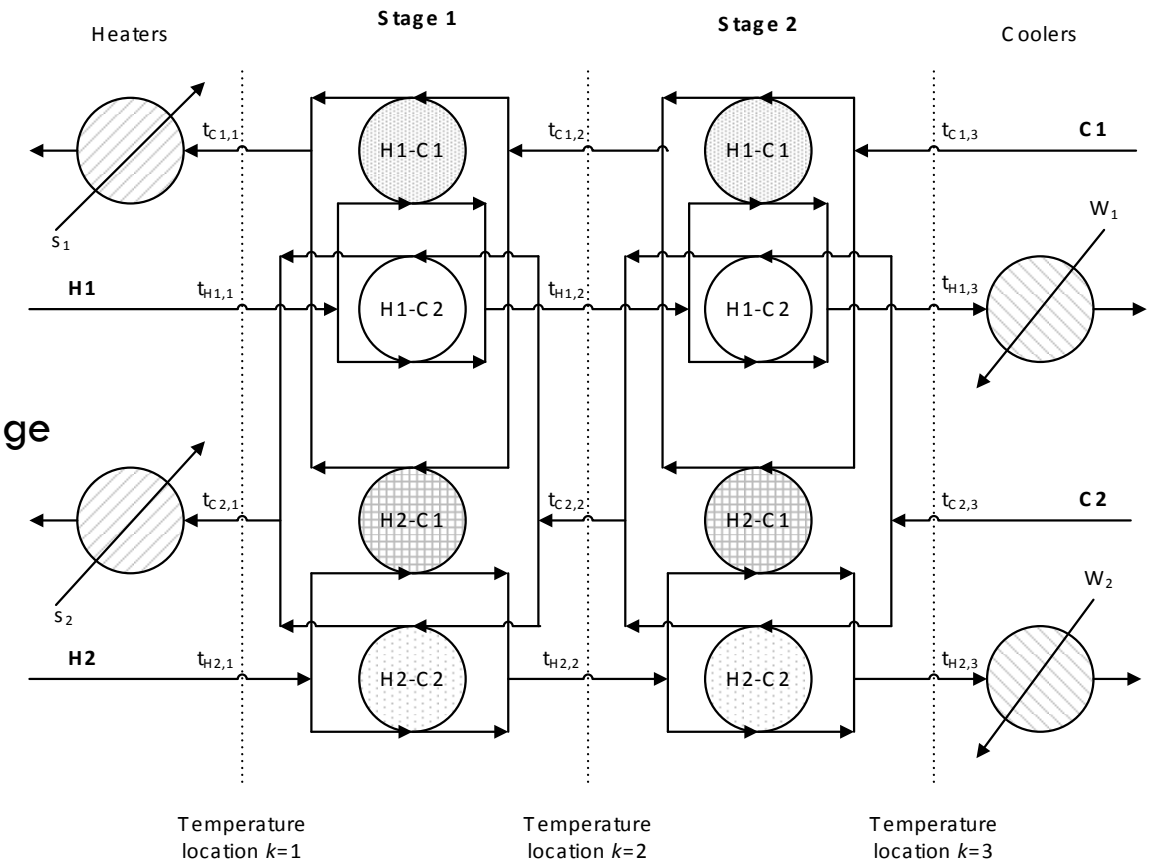

Heating and cooling target – pinch analysis

T-Q curve:
Hohmann (1971); Linnhoff and Flower (1978)

LP transshipment: Fixed F, T
Papoulias and Grossmann (1983)

Pinch location method: Variable F, T
Duran & Grossmann (1986)

$$g^{HEN}(u, Q_H, Q_C) \leq 0$$

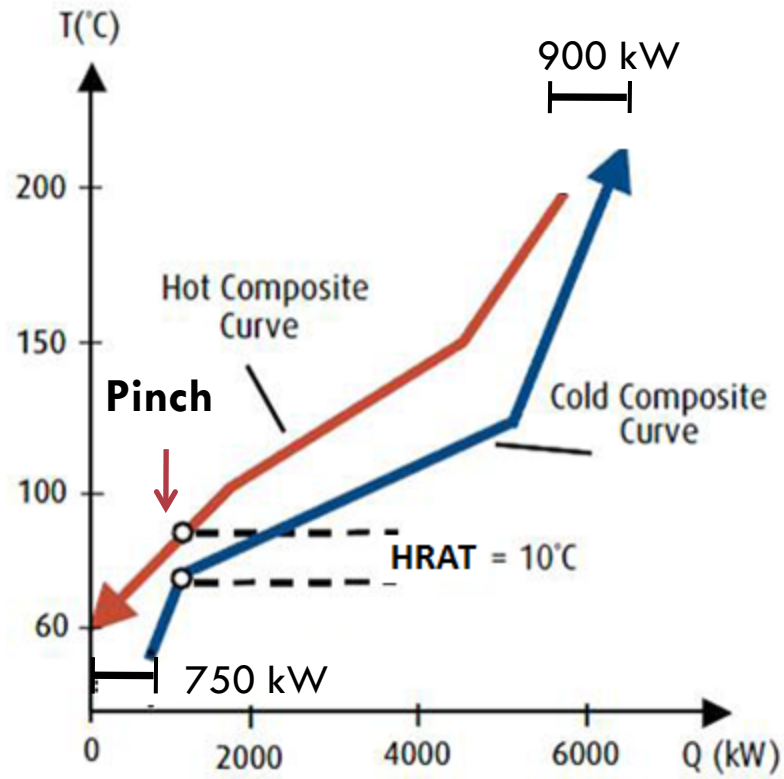

Composite Curves

Floudas (1995)