Synthesis and Optimization of biofuel production processes

20th April 2011

Mariano Martín
Assistant professor
University of Salamanca
(Spain)

Advisor
Prof. Ignacio E. Grossmann

Overview

Introduction

Energy in the world

Biofuels: Raw materials and Processes

Approach to process synthesis

Method

i.e. Bioethanol from corn (1st generation)

Results

Swichgrass as raw material

Bioethanol from switchgrass (2nd generation)

Via hydrolysis

Via gasification

Hydrogen from switchgrass

FT diesel from switchgrass

Biodiesel

From algae

From cooking oil

Conclusions

Energy in the world: Contribution of renewables[1]

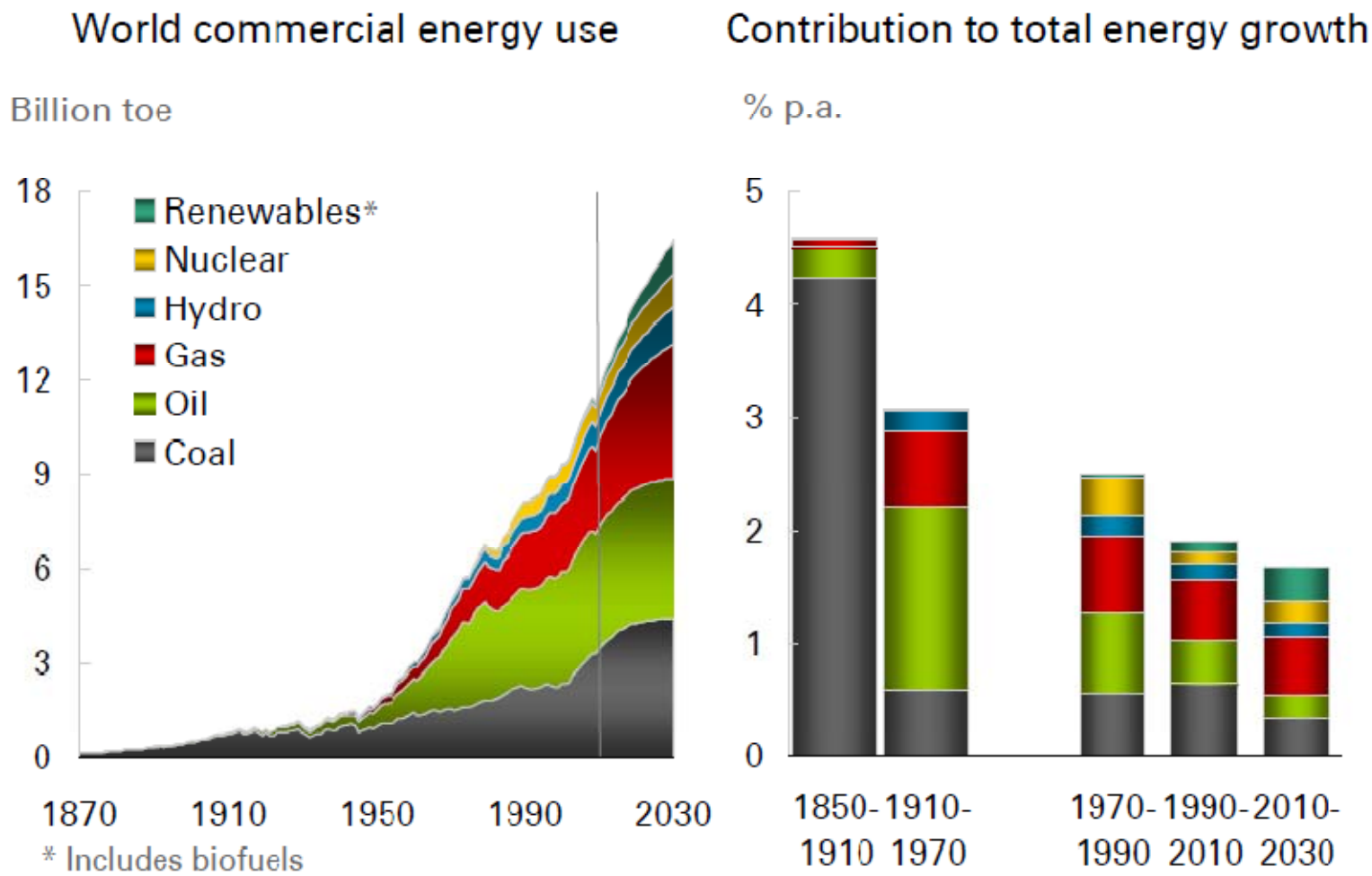

[1] BP annual report 2010

Energy in the world: Contribution of renewables

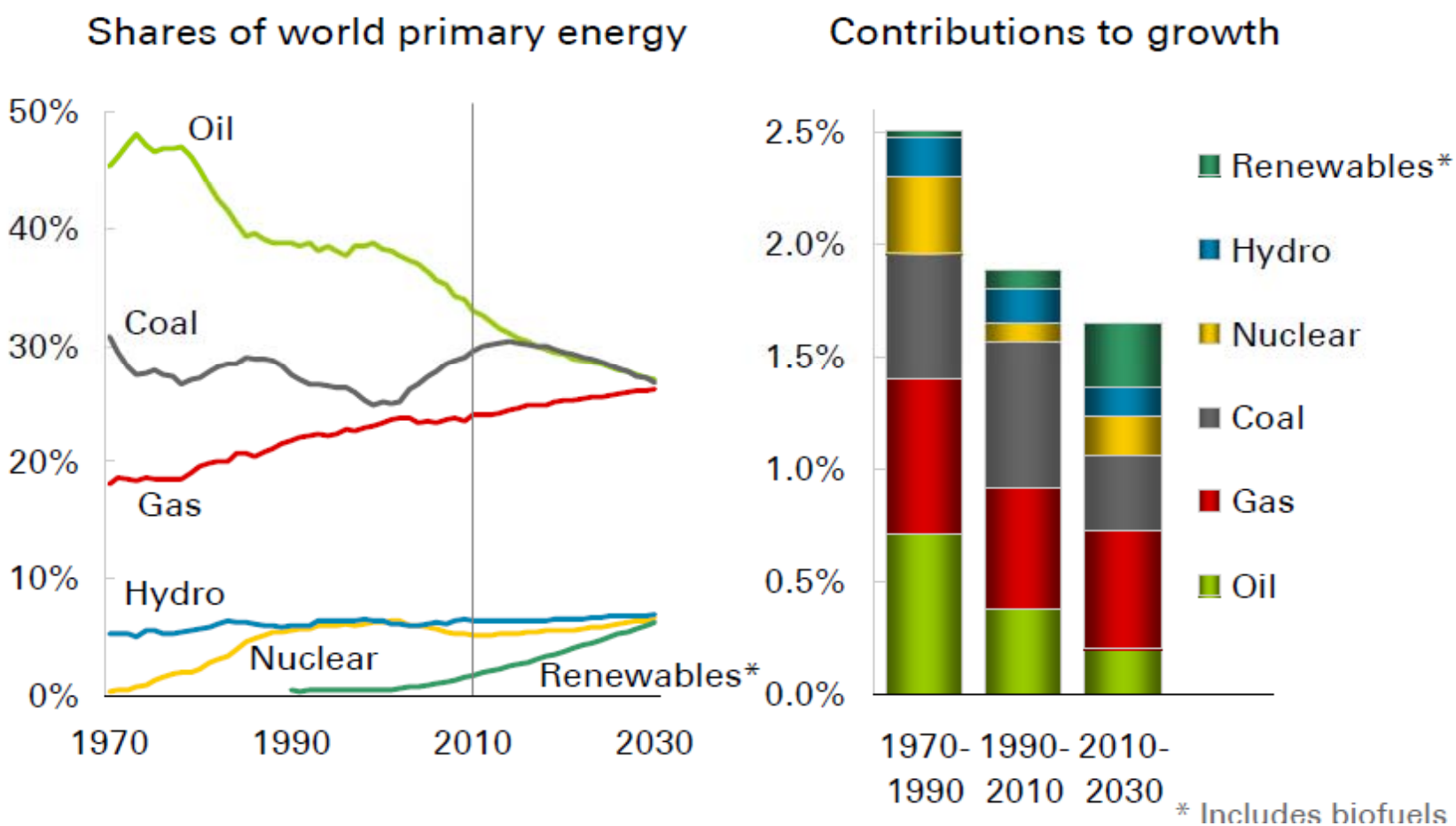

[1] BP annual report 2010

Energy in the world: Contribution of renewables

Only biomass provides a short term source of fuels for the transportation sector

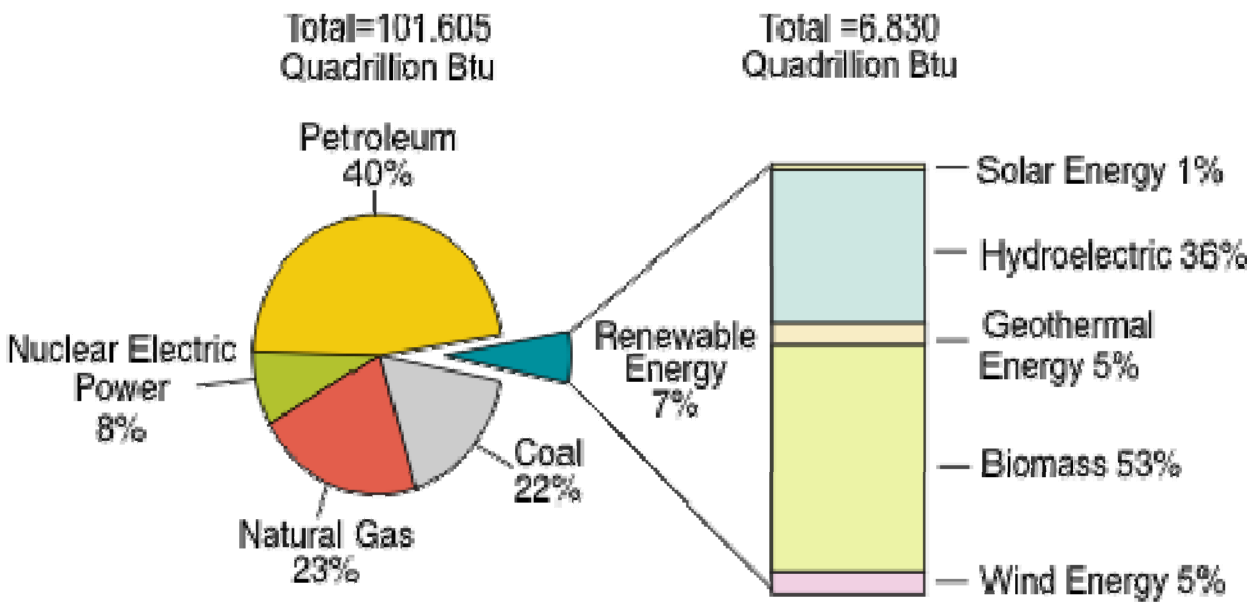

Note: Sum of components may not equal 100 percent due to independent rounding.
Source: EIA, *Renewable Energy Consumption and Electricity Preliminary 2007 Statistics*, Table 1: U.S. Energy Consumption by Energy Source, 2003-2007 (May 2008).

Introduction

Current ethanol from sugar cane or corn and biodiesel from vegetable oils compete with the **food market**.

Governmental policies support the production of **lignocellulosic based biofuels and the reuse of wastes and new sources (algae)**

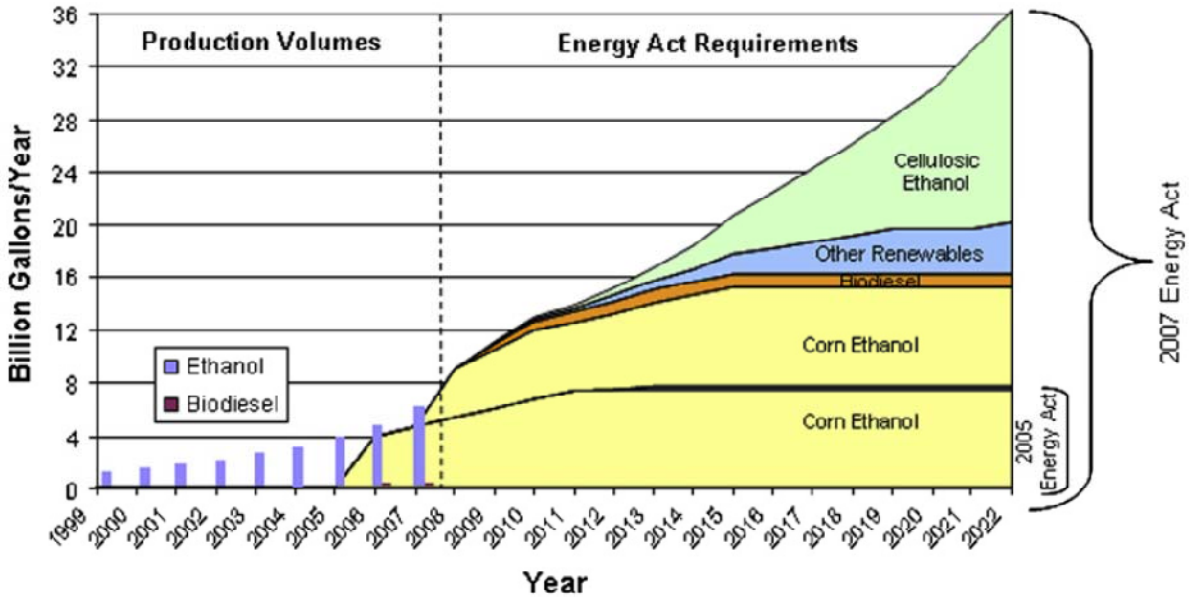

Introduction

Governmental policies support the production of 2nd generation of biofuels **based on the high yields from crop to fuel**

There is a need for **optimized production processes** of bioethanol, biodiesel and other fuels from lignocellulosic materials and wastes

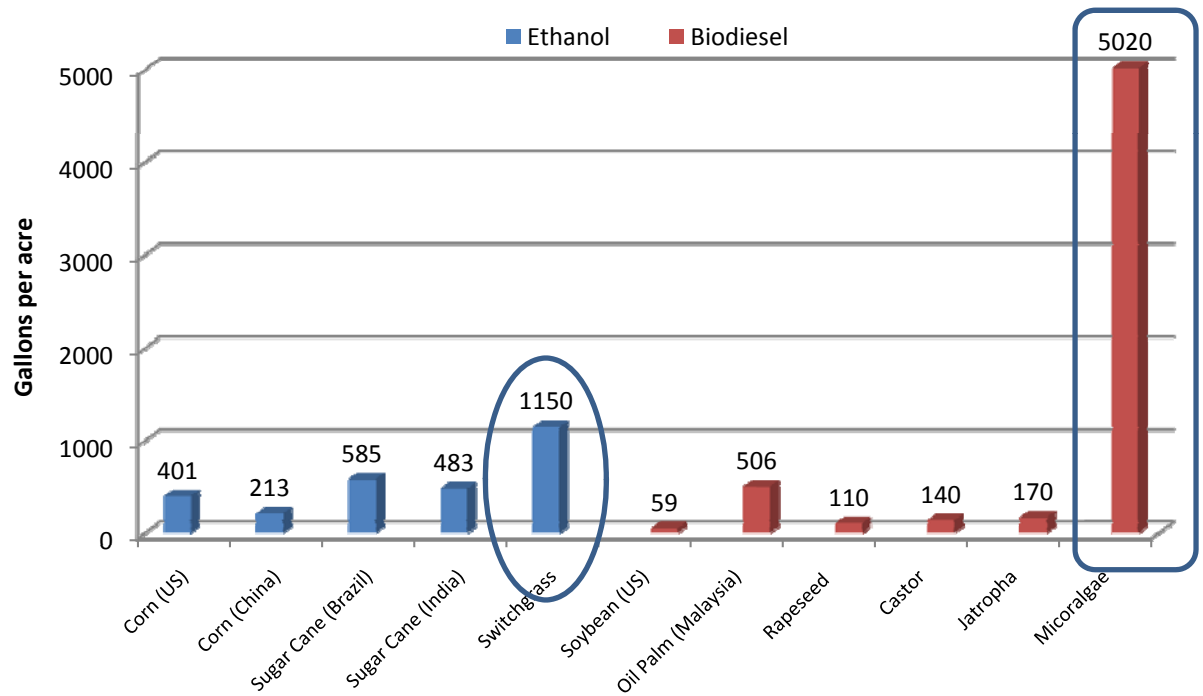

Introduction

We use mathematical programming techniques to accomplish the synthesis of the production of:

bioethanol, FT-diesel and hydrogen, from **Switchgrass**,

biodiesel from **cooking oil** or **algae oil**.

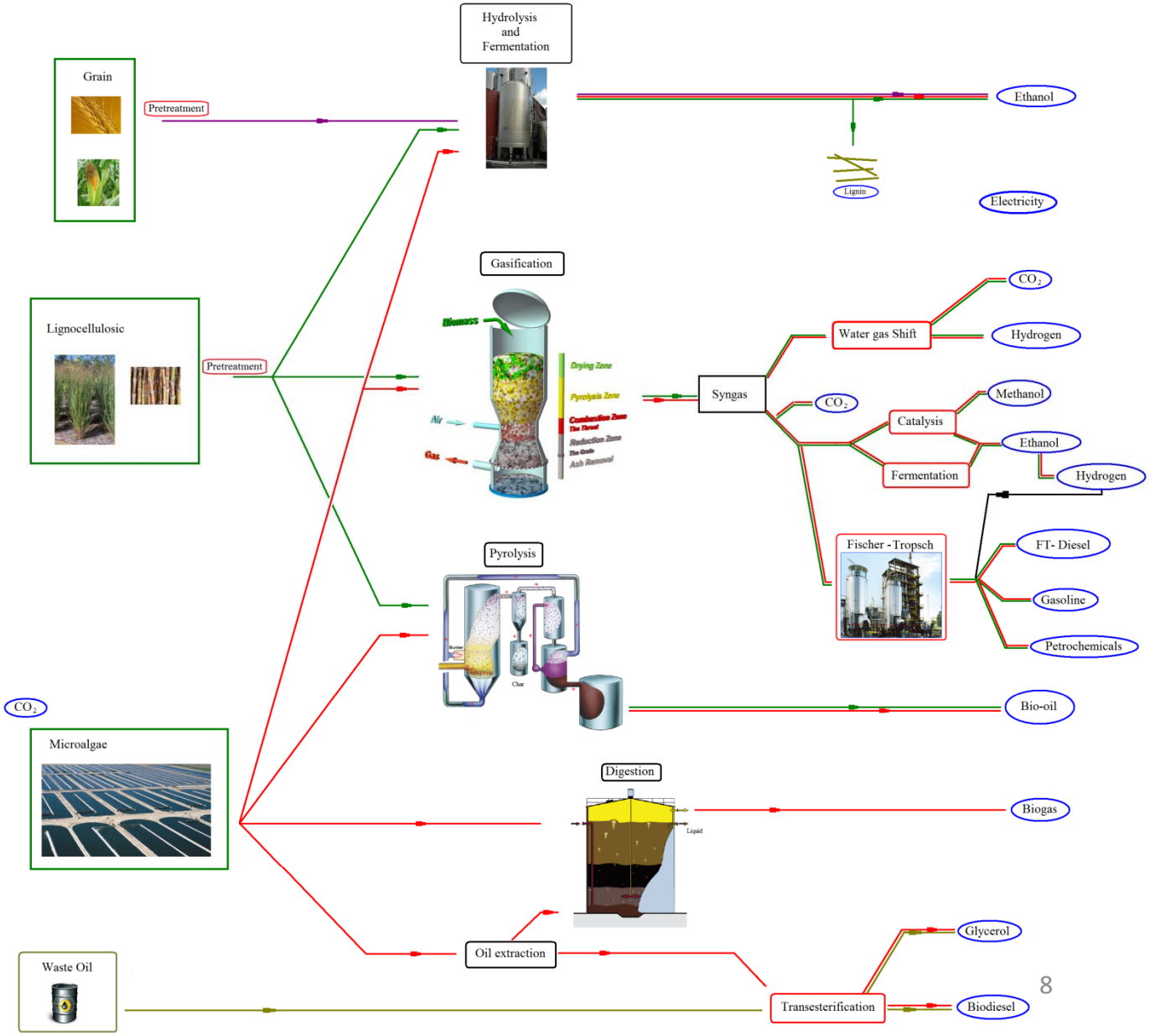

The main concerns in biofuel industry are

energy and water

consumption [2,3,4].

[2] Grossmann, I.E., Martin, M. (2010) Chinese J. Chem. Eng, 18 (6) 914-922
[3] Ahmetovic, E.; Martín, M.; Grossmann, I.E. (2010) Ind. Eng. Chem Res. *49* (17) 7972- 7982
[4] Martín, M.; Ahmetovic, E.; Grossmann, I.E. (2010) I&ECR doi: 10.1021/ie101175p

Introduction

The main concern in biofuels industry is the **energy efficiency** of the biofuel.

Corn ethanol was deemed to **consume more energy** to be produced than the one it could generate, [2]

Table 1 Energy consumption in corn-based ethanol plants

Author (year)	Energy consumption/J·L^{-1} (Btu·gal^{-1})
Pimentel (2001) [34]	209.25×10^5 (75118)
Keeney and DeLuca (1992) [35]	135.02×10^5 (48470)
Wang *et al.* (1999) [36]	113.79×10^5 (40850)
Shapouri *et al.* (2002) [7]	144.24×10^5 (51779)
Wang *et al.* (2007) [37]	106.75×10^5 (38323)

Energy consumption optimization is quite **straightforward** due to the **high cost** of energy

[2] Grossmann, I.E., Martin, M. (2010) Chinese J. Chem. Eng, 18 (6) 914-922

Introduction

Water consumption has become a major concern in process industry due to the **increase in the demand** as a result of the growth of population and development around the world [5,6]

Two-thirds of the world population will face water stress by year 2025

Irrigation

Process

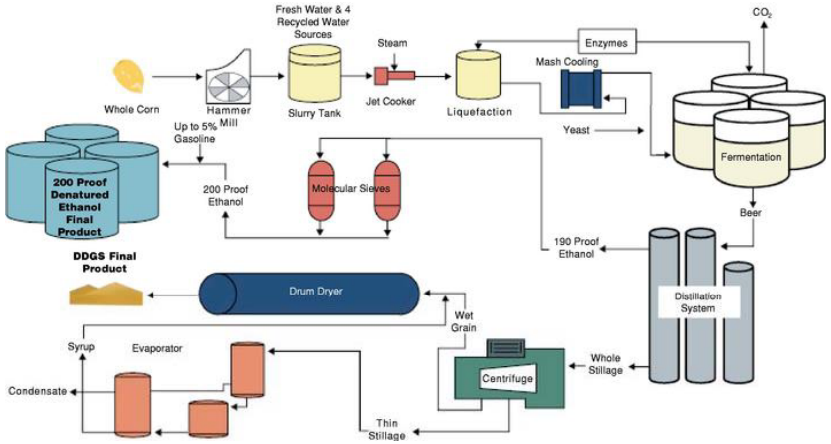

[5] Elcock, D. (2008) Baseline and Projected Water Demand Data for Energy and competing Water Use Sectors, ANL/EVS/TM/08-8

[6] Chiu, Yi-Wen, Walseth, B., Suh, S. (2009) Environ. Sci. Technol., 43 (8), pp 2688–2692

Introduction

Water consumption in corn ethanol plants [7]:

From 3 to 15 gal water/gal ethanol

The best possible value 2.85 gal water/gal ethanol

Mean industrial value 3.4 gal water/gal ethanol

If we use lignocellulosic raw materials [7]

6 to 9.8 galwater/gal ethanol for switchgrass

1.94-2 galwater/gal ethanol for hybrid poplar

Biodiesel production requires [8]

1 to 3 galwater/gal biodiesel

The low price of water makes it difficult to take into account in a cost function

[7] Wu et al (2009) Argone national lab
[8] Pate et al 2007 Report SAND 2007-1349C

Method

We propose a two stage method [2] for the optimization of both:

1.-Energy optimization Superstructure and parameter optimization including economic evaluation to select the flowsheet out of a **large number of alternatives** and the main operating conditions

2.-Water optimization: We design the optimal water network [3,4].

[2] Grossmann, I.E., Martin, M. (2010) Chinese J. Chem. Eng, 18 (6) 914-922
[3] Ahmetovic, E.; Martín, M.; Grossmann, I.E. (2010) Ind. Eng. Chem Res. *49* (17) 7972- 7982
[4] Martín, M.; Ahmetovic, E.; Grossmann, I.E. (2010) I&ECR doi: 10.1021/ie101175p

Method

Corn based ethanol

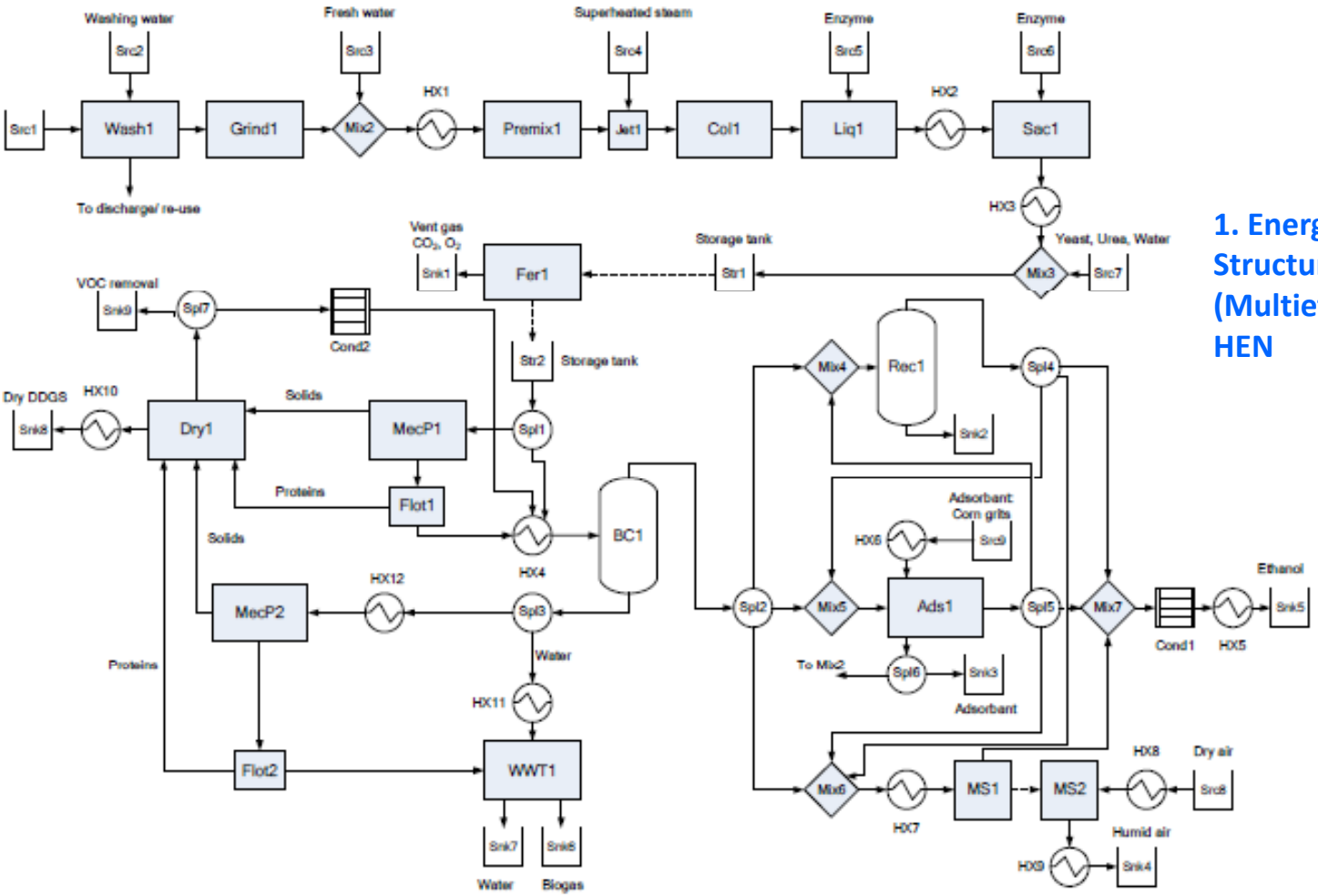

1. Energy Optimization
Structural
(Multieffect columns)
HEN

[9] Karuppiah et al 2008 AIChE J. 54, 1499-1525

Method

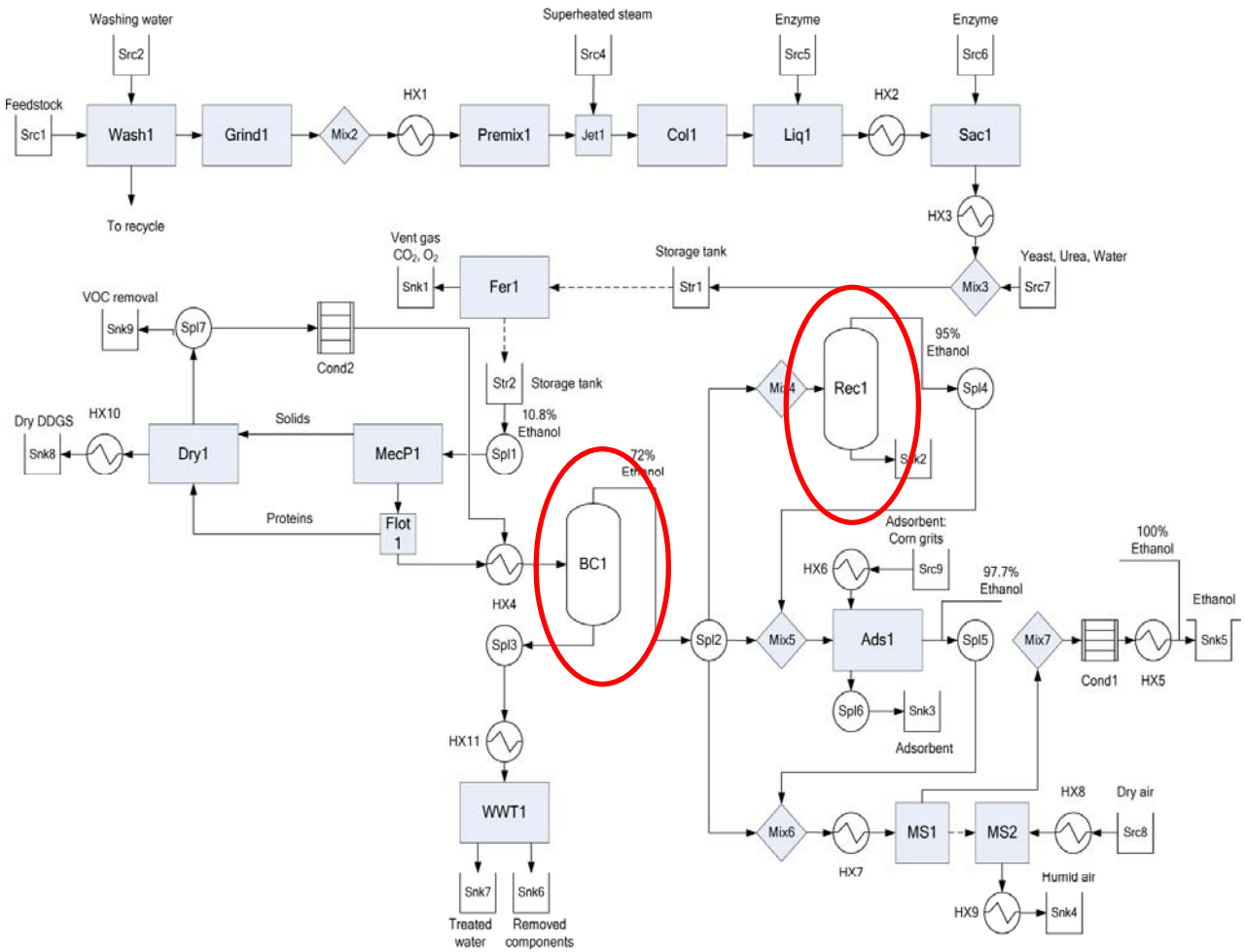

[9] Karuppiah et al 2008 AIChE J. 54, 1499-1525

Method

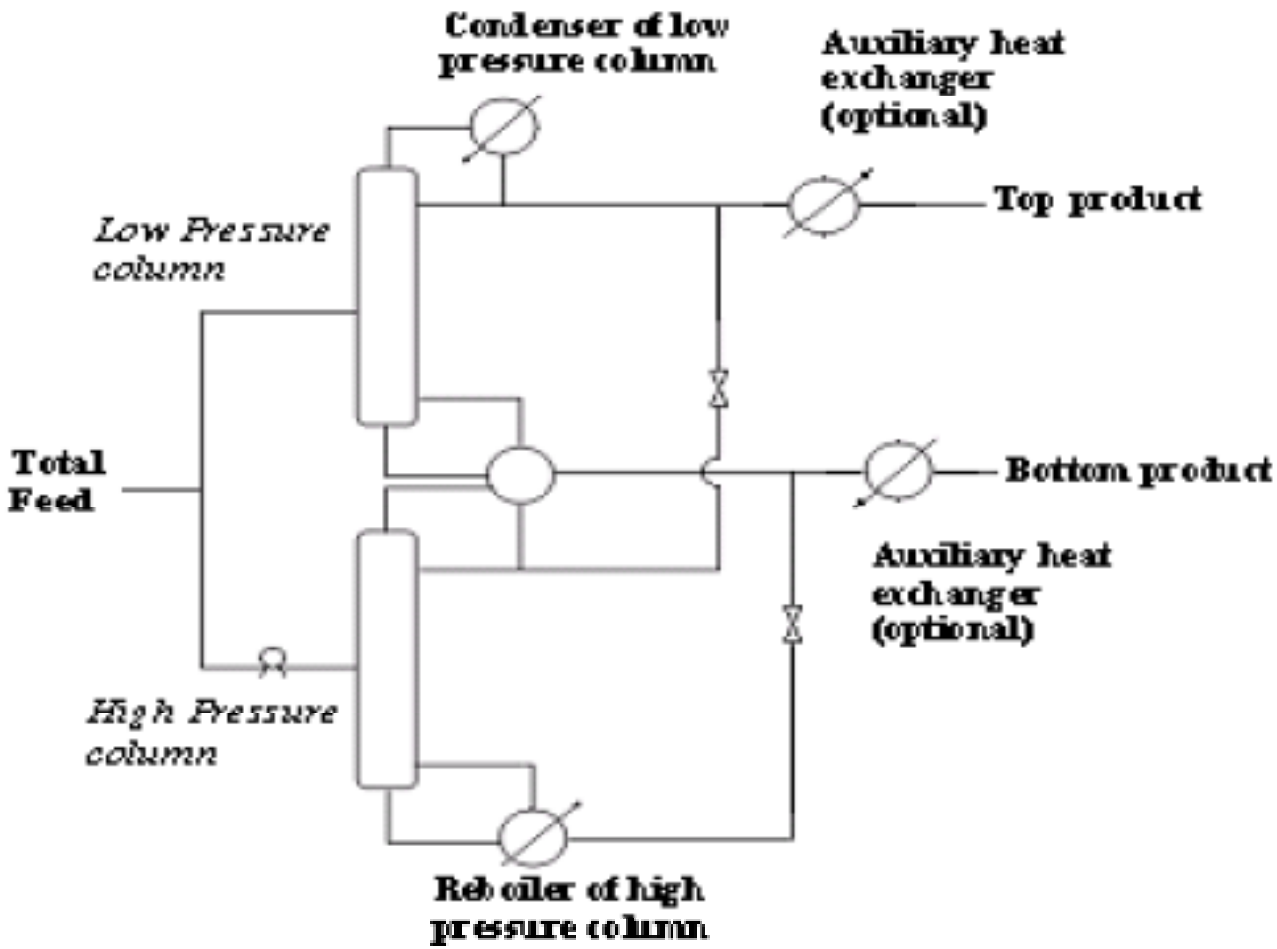

[9] Karuppiah et al 2008 AIChE J. 54, 1499-1525

Method

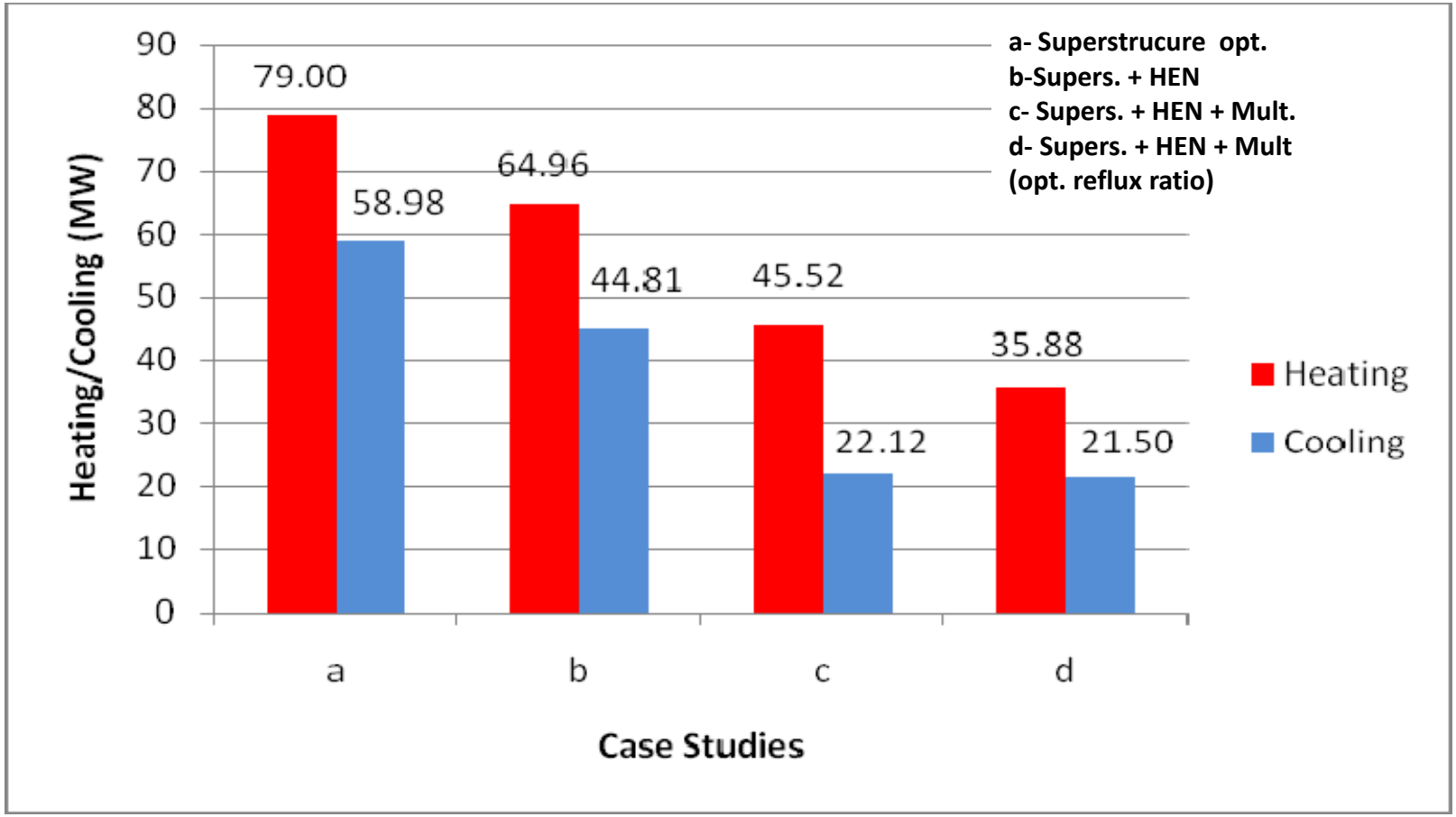

[9] Karuppiah et al 2008 AIChE J. 54, 1499-1525

Results

Water network

$$\min Z = H \cdot \sum_{s \in SW} FW_s \cdot CFW_s + AR \cdot \sum_{t \in TU} IC_t \cdot \left(FTU_t^{out}\right)^{\alpha} + \frac{1}{3} \cdot \sum_{t \in TU} IC_t \cdot \left(FTU_t^{out}\right)^{\alpha}$$

Subject to:

- Splitter mass balances
- Mixer mass balances (bilinear)
- Process units mass balances
- Treatment units mass balances

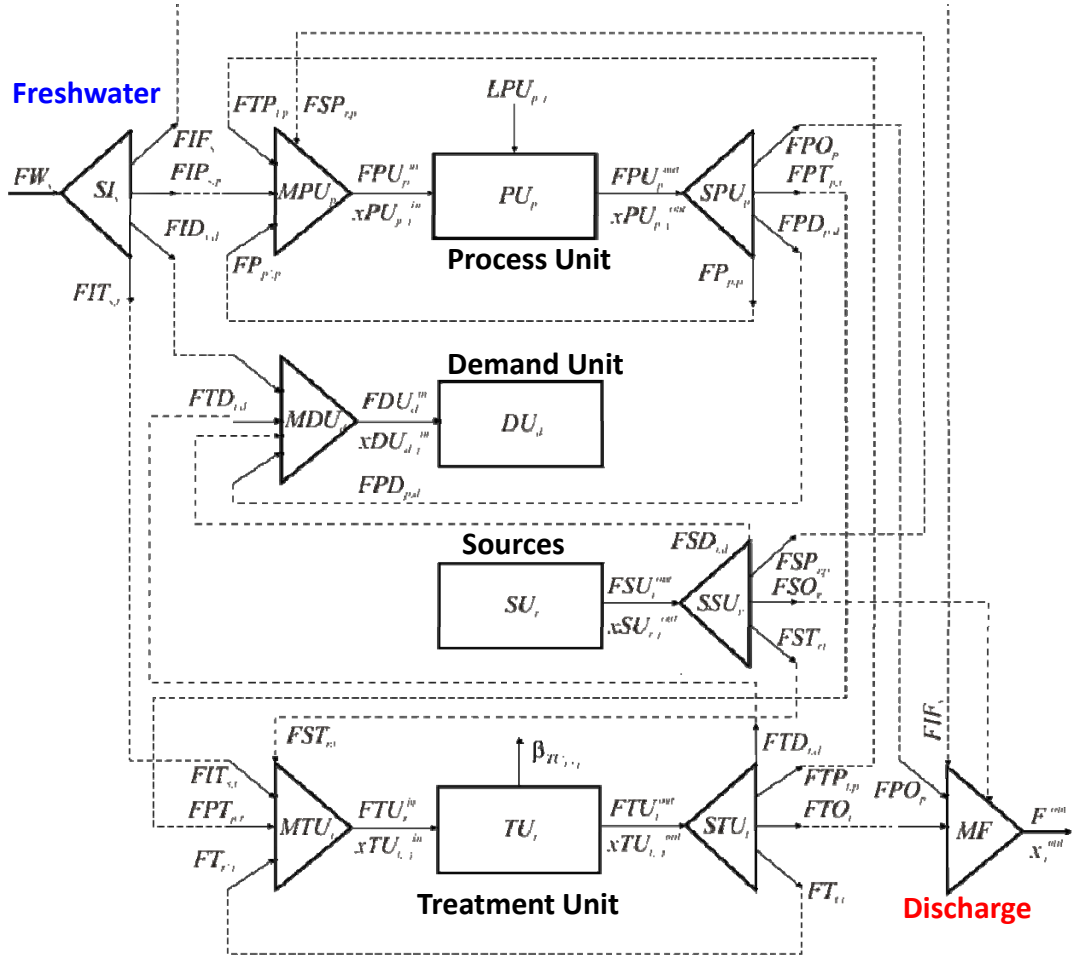

[3] Ahmetovic, E.; Martín, M.; Grossmann, I.E. (2010) Ind. Eng. Chem Res. *49* (17) 7972- 7982

Results

Water network

Table 1.- Inventory of units for the water networks of the bioethanol processes.

Process	Process Units	Demand Units	Source Units
Corn	P1: Washing	D1: Fermentor	S1: Rec Column
	P2: Boiler	D2: Boiler	S2: Beer Column
	P3: Cooling Tower	D3: Cooling tower	

Treatment Units

Solids removal

Organics removal

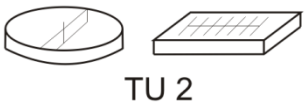

Salt removal

[4] Martín, M.; Ahmetovic, E.; Grossmann, I.E. (2010) Ind. Eng. Chem Res DOI: doi: 10.1021/ie101175p

Results

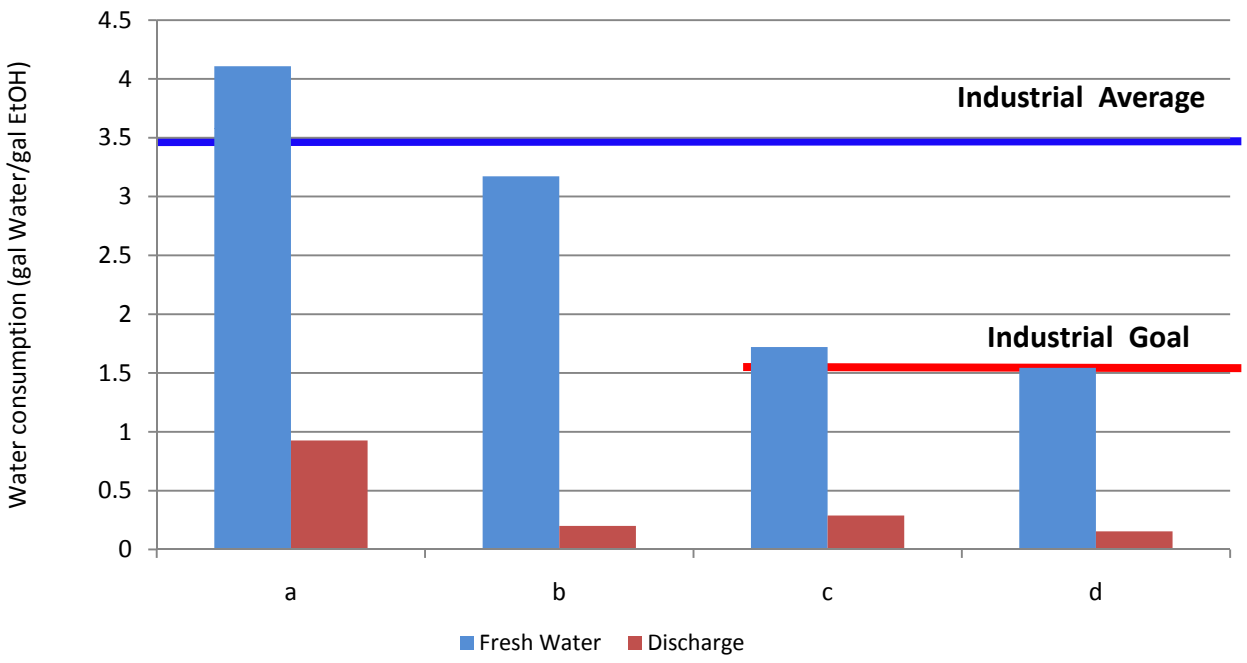

a- Superstrucure opt.
b-Supers. + HEN
c- Supers. + HEN + Mult.
d- Supers. + HEN + Mult (opt. reflux ratio)

[3] Ahmetovic, E.; Martín, M.; Grossmann, I.E. (2010) Ind. Eng. Chem Res. *49* (17) 7972- 7982

Switchgrass as raw material

Results

Ethanol from hydrolysis of Switchgrass

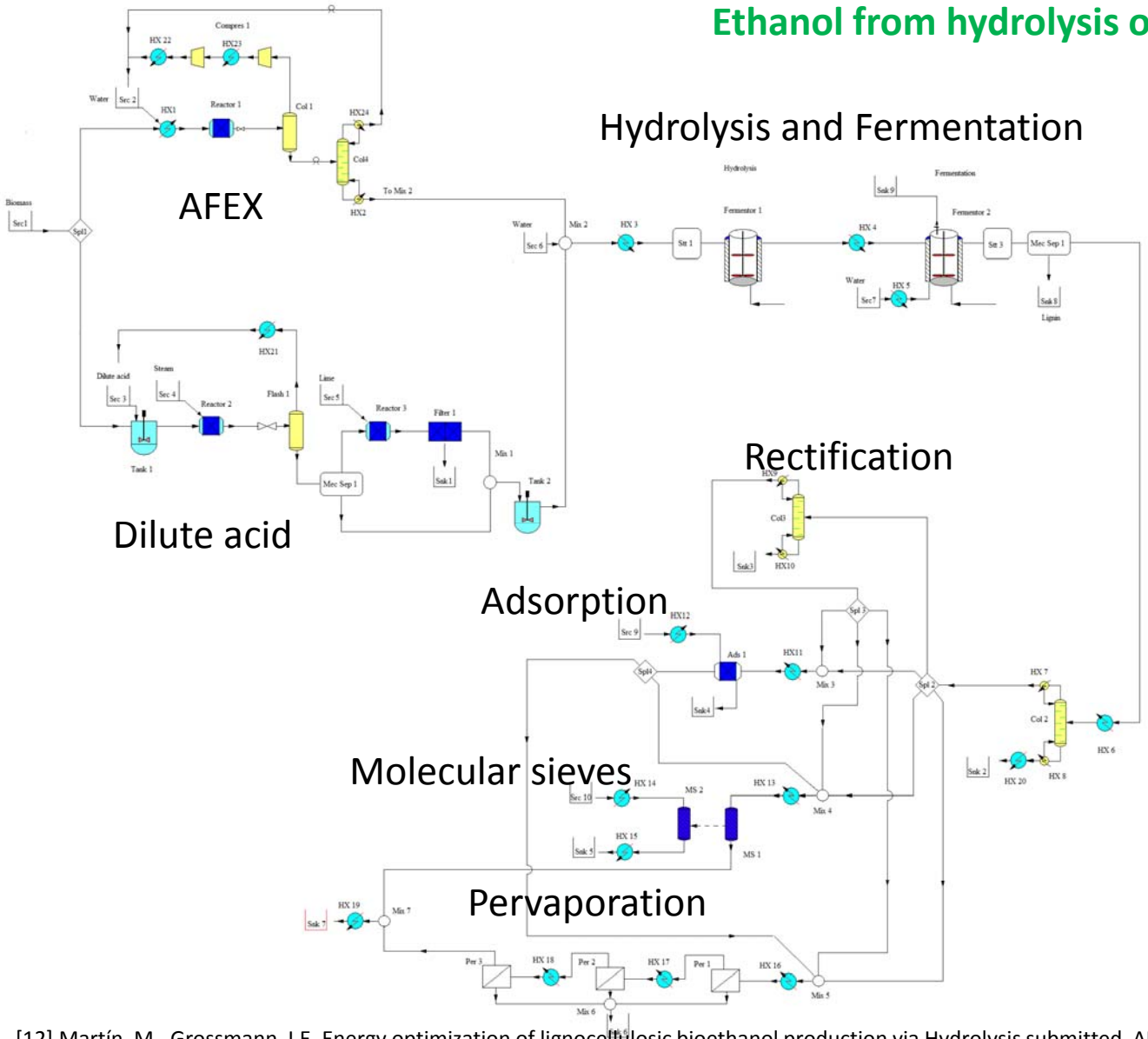

[12] Martín, M., Grossmann, I.E. Energy optimization of lignocellulosic bioethanol production via Hydrolysis submitted AICHE

Results

Ethanol from hydrolysis of Switchgrass

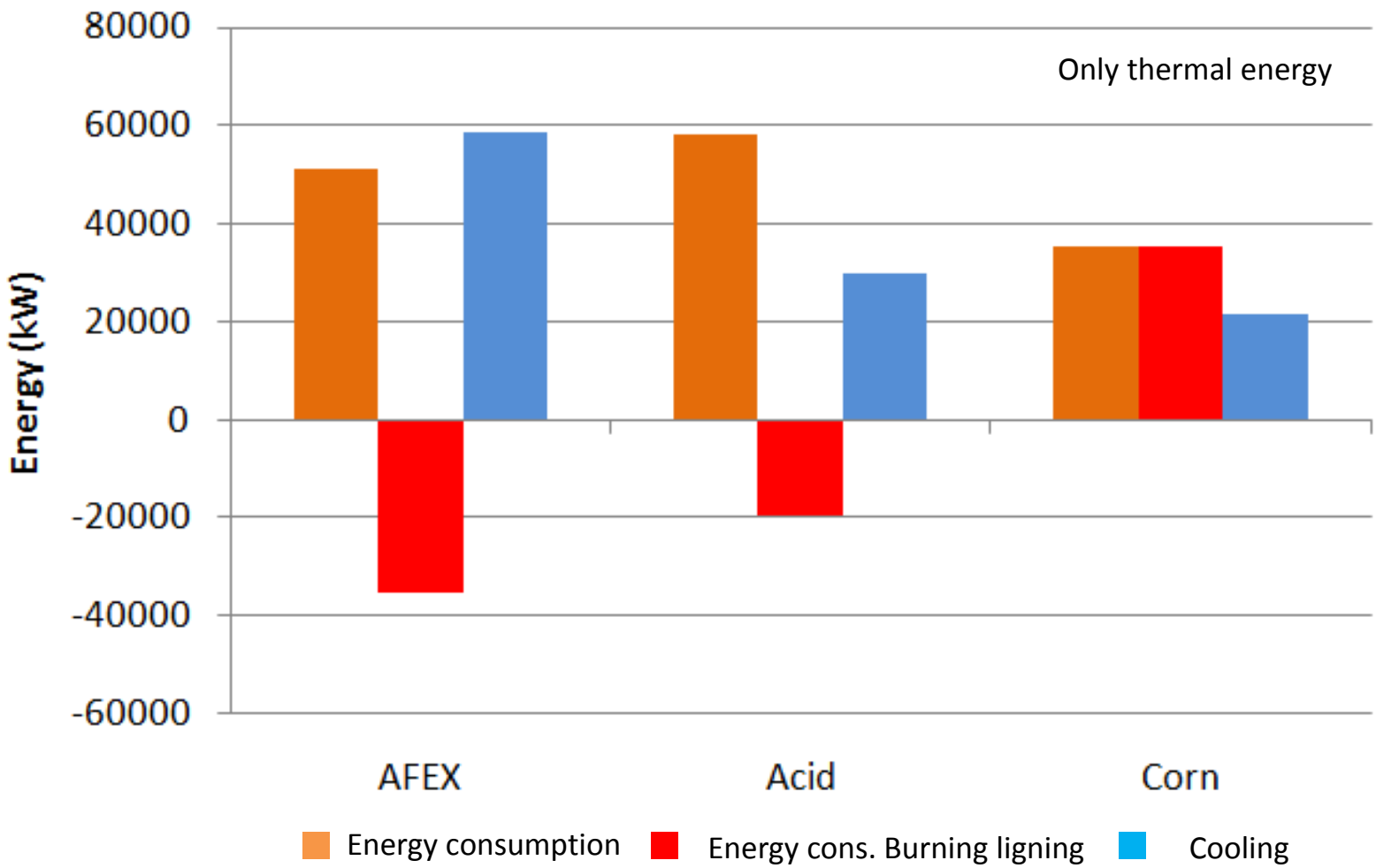

[12] Martín, M., Grossmann, I.E. Energy optimization of lignocellulosic bioethanol production via Hydrolysis submitted AICHE

Results

Ethanol from hydrolysis of Switchgrass

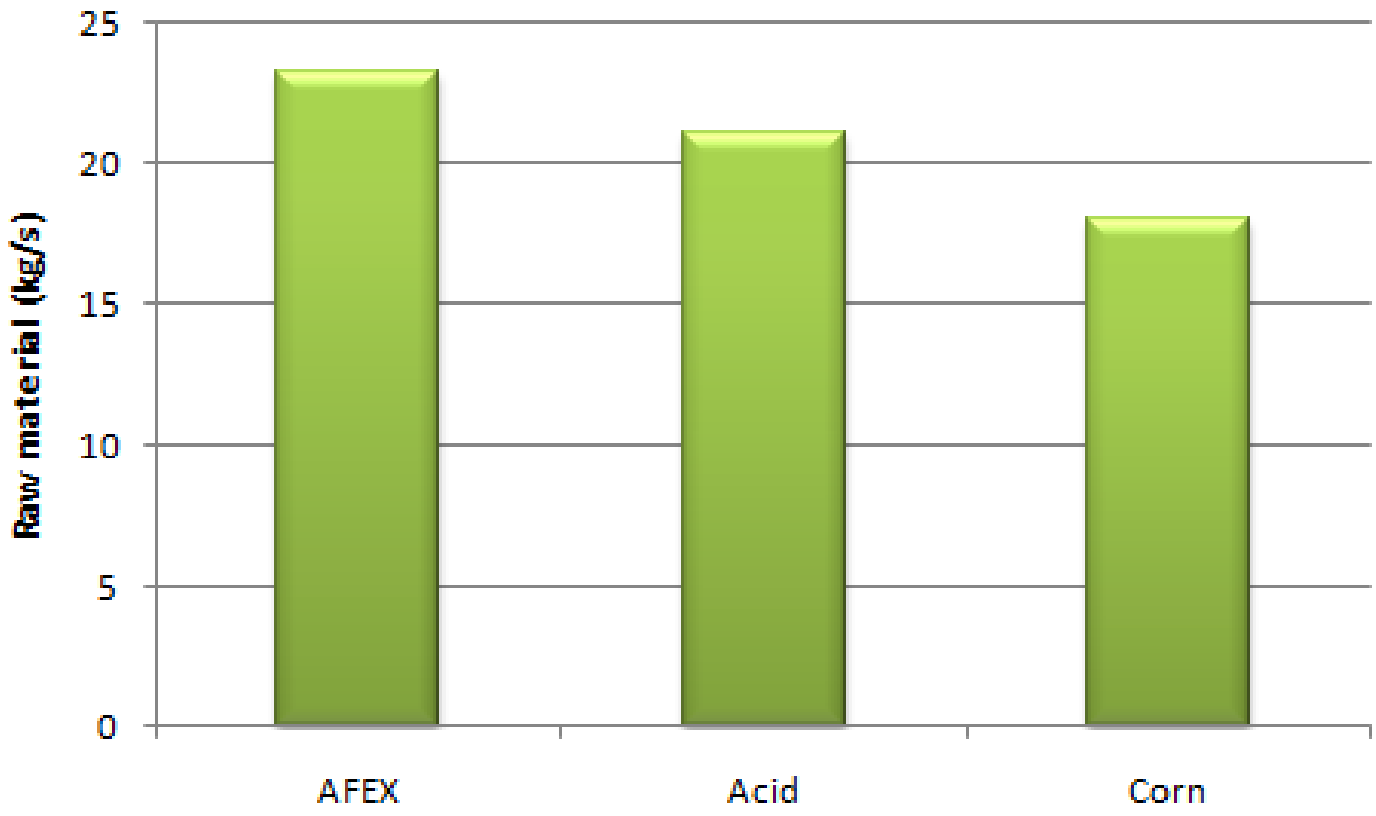

[12] Martín, M., Grossmann, I.E. Energy optimization of lignocellulosic bioethanol production via Hydrolysis submitted AICHE

Results

Optimal flowsheet for the production of ethanol from hydrolysis of Switchgrass

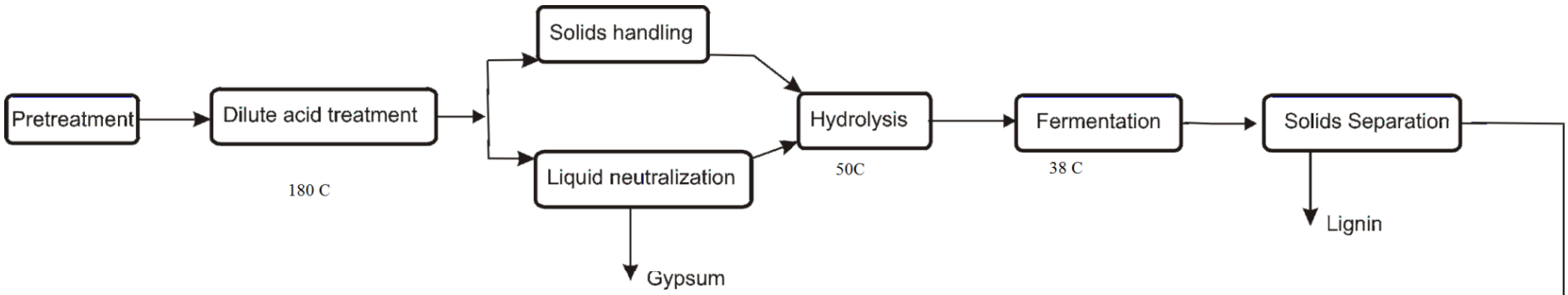

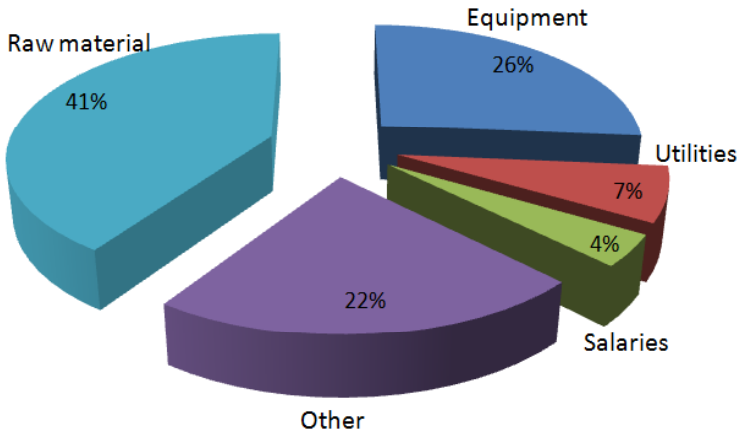

$0.8/gal, $161MM

[12] Martín, M., Grossmann, I.E. Energy optimization of lignocellulosic bioethanol production via Hydrolysis submitted AICHE

Results

Ethanol via gasification of Switchgrass

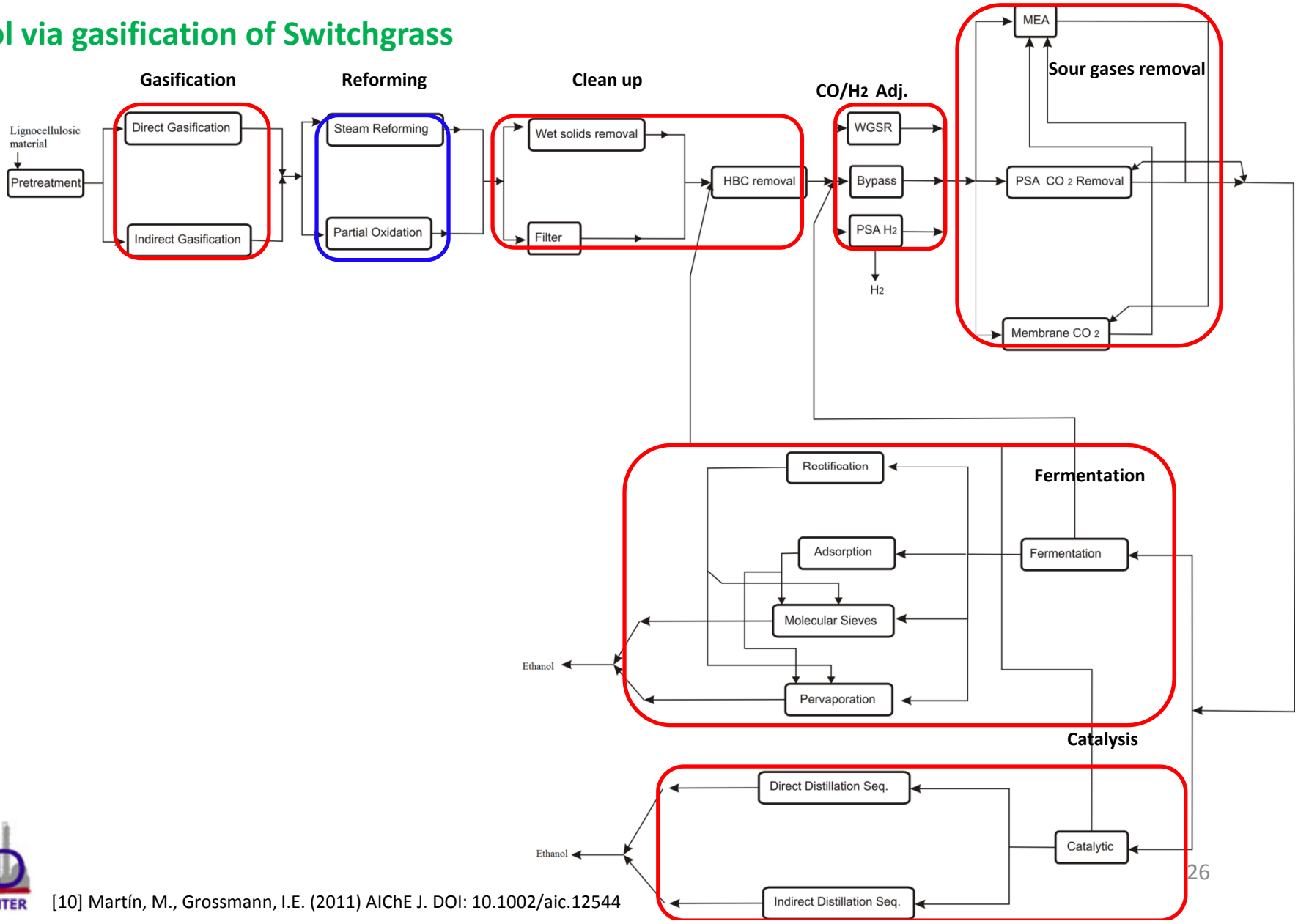

[10] Martín, M., Grossmann, I.E. (2011) AIChE J. DOI: 10.1002/aic.12544

Results

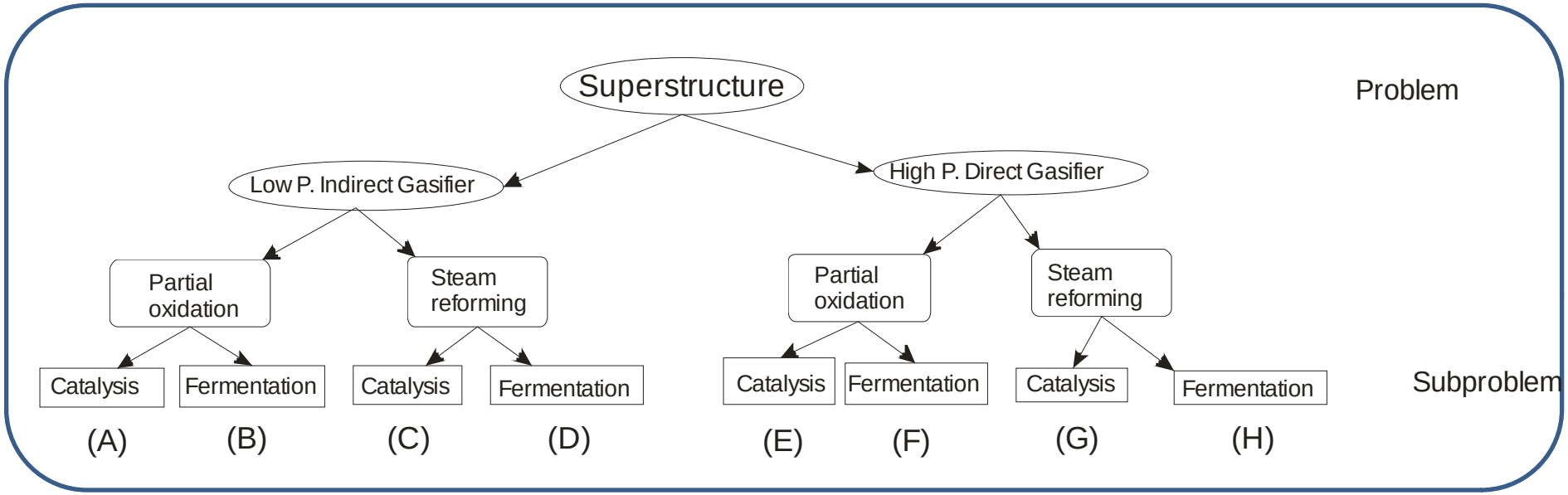

Decomposition of GDP in 8 subproblems

Decision levels: Gasifier

Reforming mode

Reaction of Syn Gas

Optimization of : Syngas composition adjustment

Sour gases removal

Ethanol purification removal

Results

Optimal flowsheet for the production of ethanol via gasification of Switchgrass

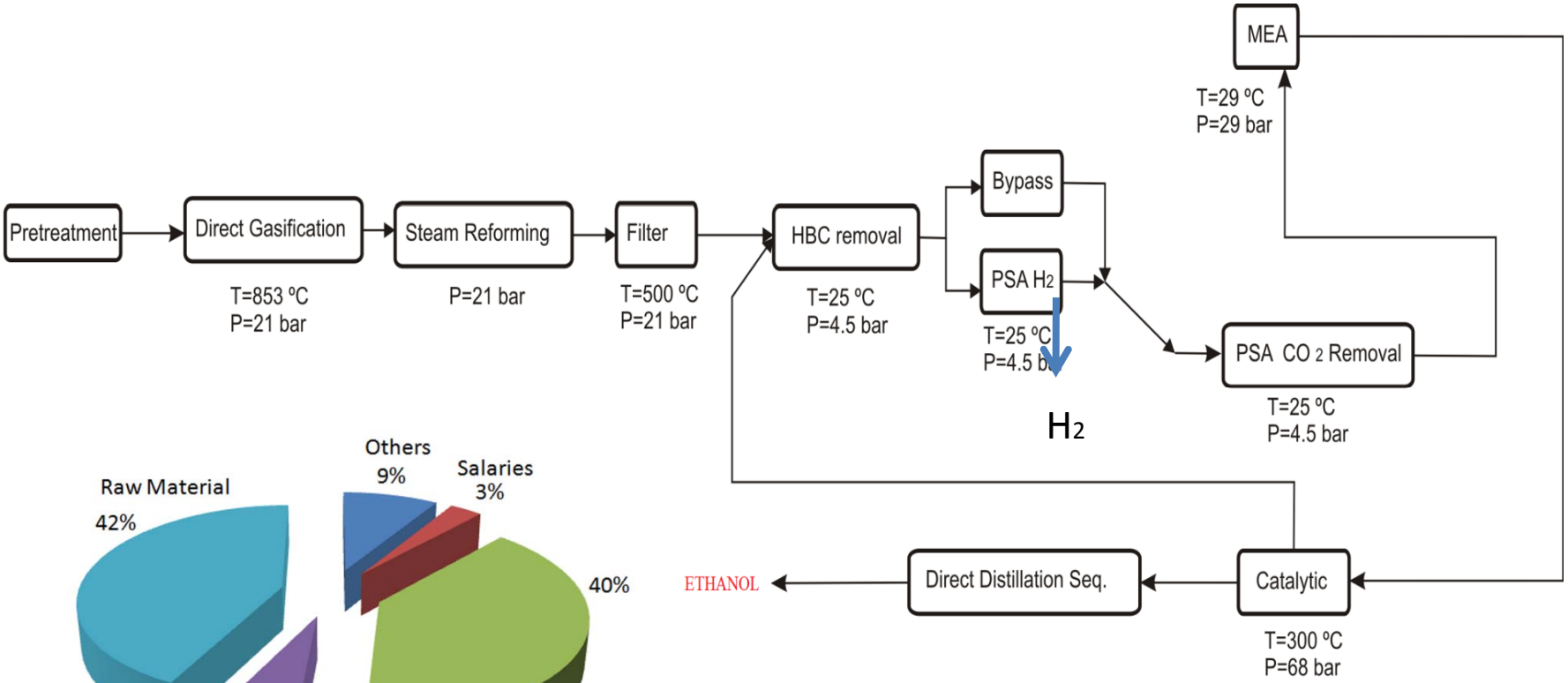

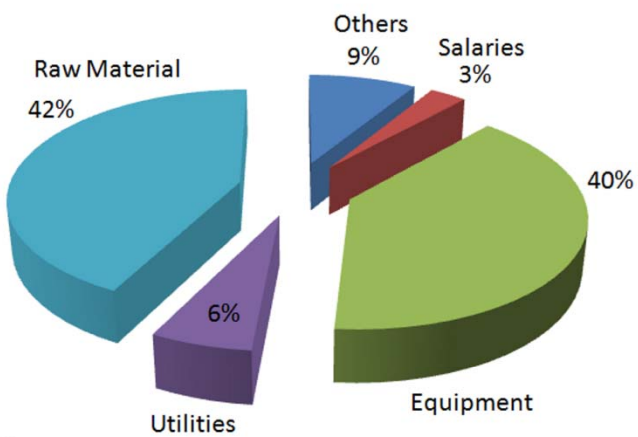

Major saving due to income from excess of H_2

$0.41/gal, $335MM

[10] Martín, M., Grossmann, I.E. (2011) AIChE J. DOI: 10.1002/aic.12544

Results

Ethanol via gasification of Switchgrass

Water network

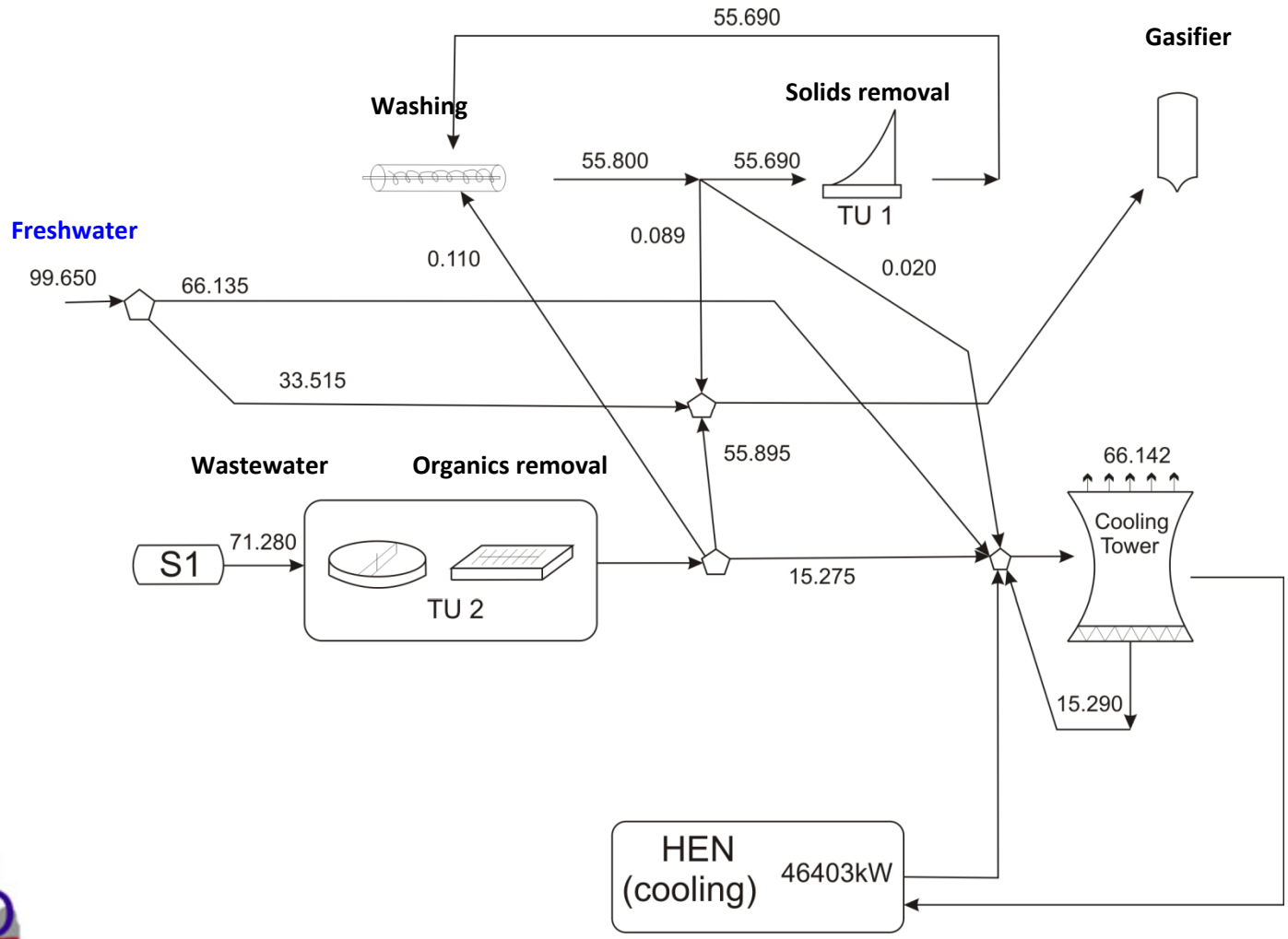

[4] Martín, M.; Ahmetovic, E.; Grossmann, I.E. (2011) Ind. Eng. Chem Res DOI: doi: 10.1021/ie101175p

Results

Energy consumption: Bioethanol

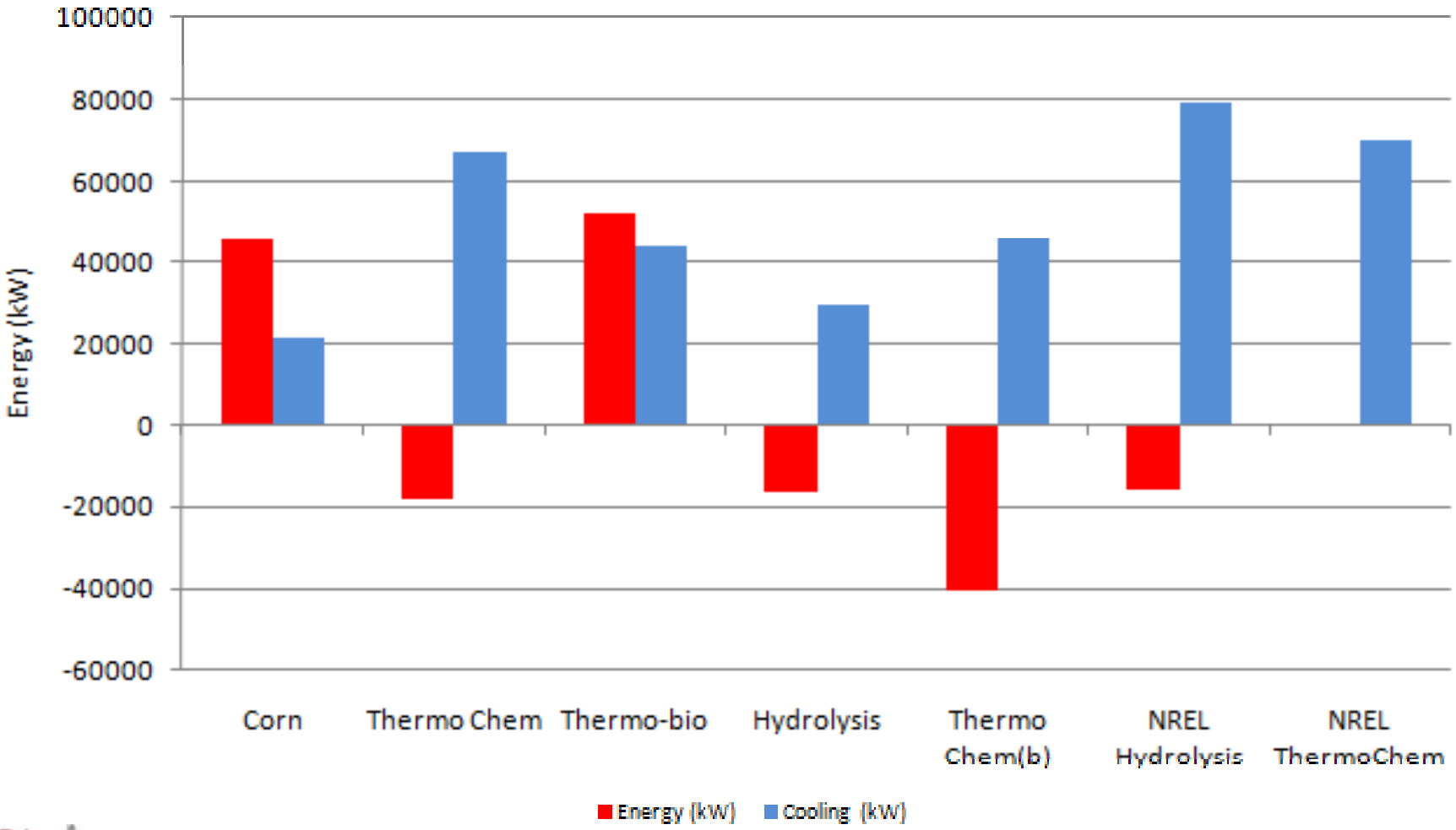

[10] Martín, M., Grossmann, I.E. (2011) AIChE J. DOI: 10.1002/aic.12544

Results

Water consumption: Bioethanol

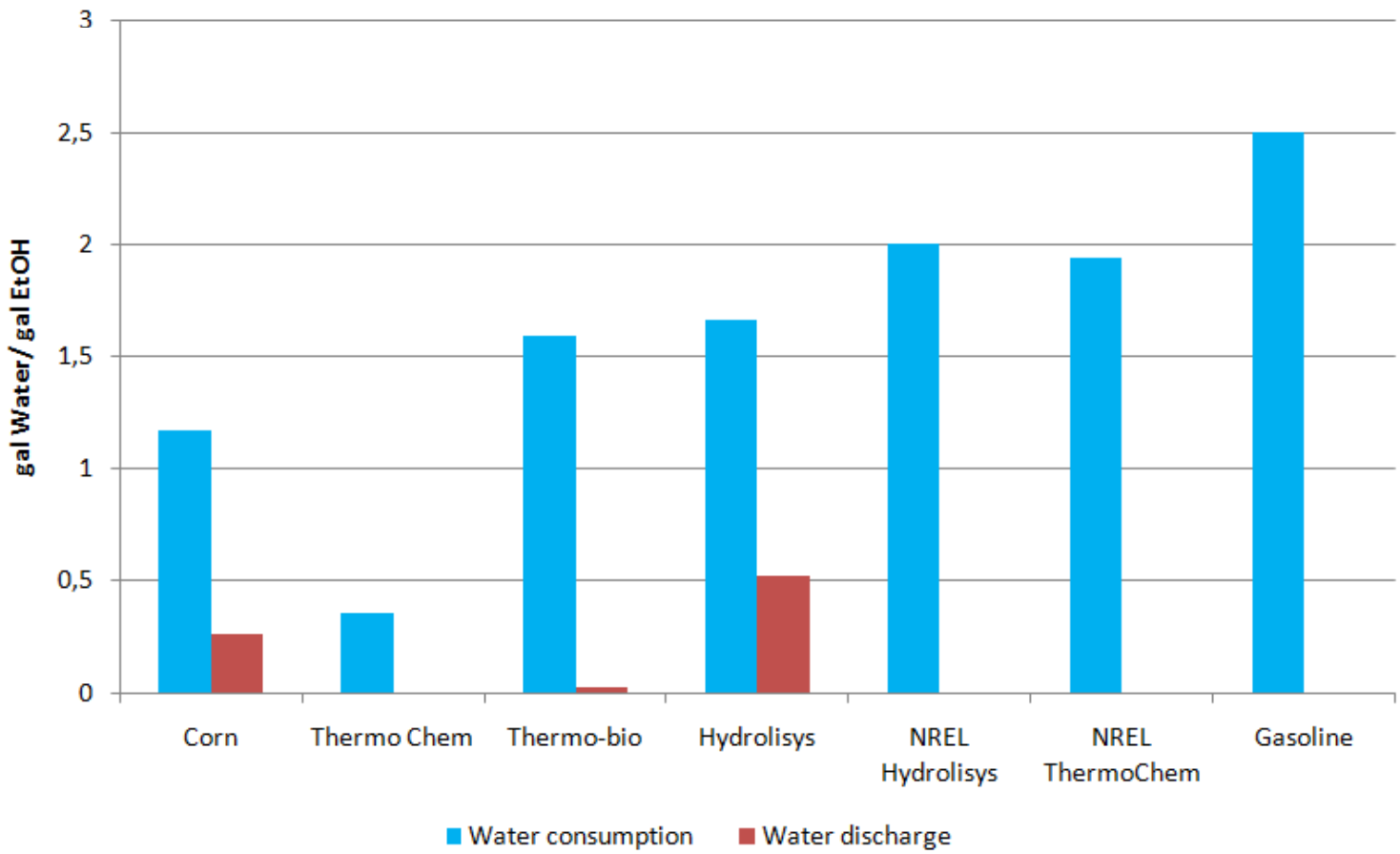

[4] Martín, M.; Ahmetovic, E.; Grossmann, I.E. (2011) Ind. Eng. Chem Res DOI: doi: 10.1021/ie101175p

Results

Hydrogen from Switchgrass

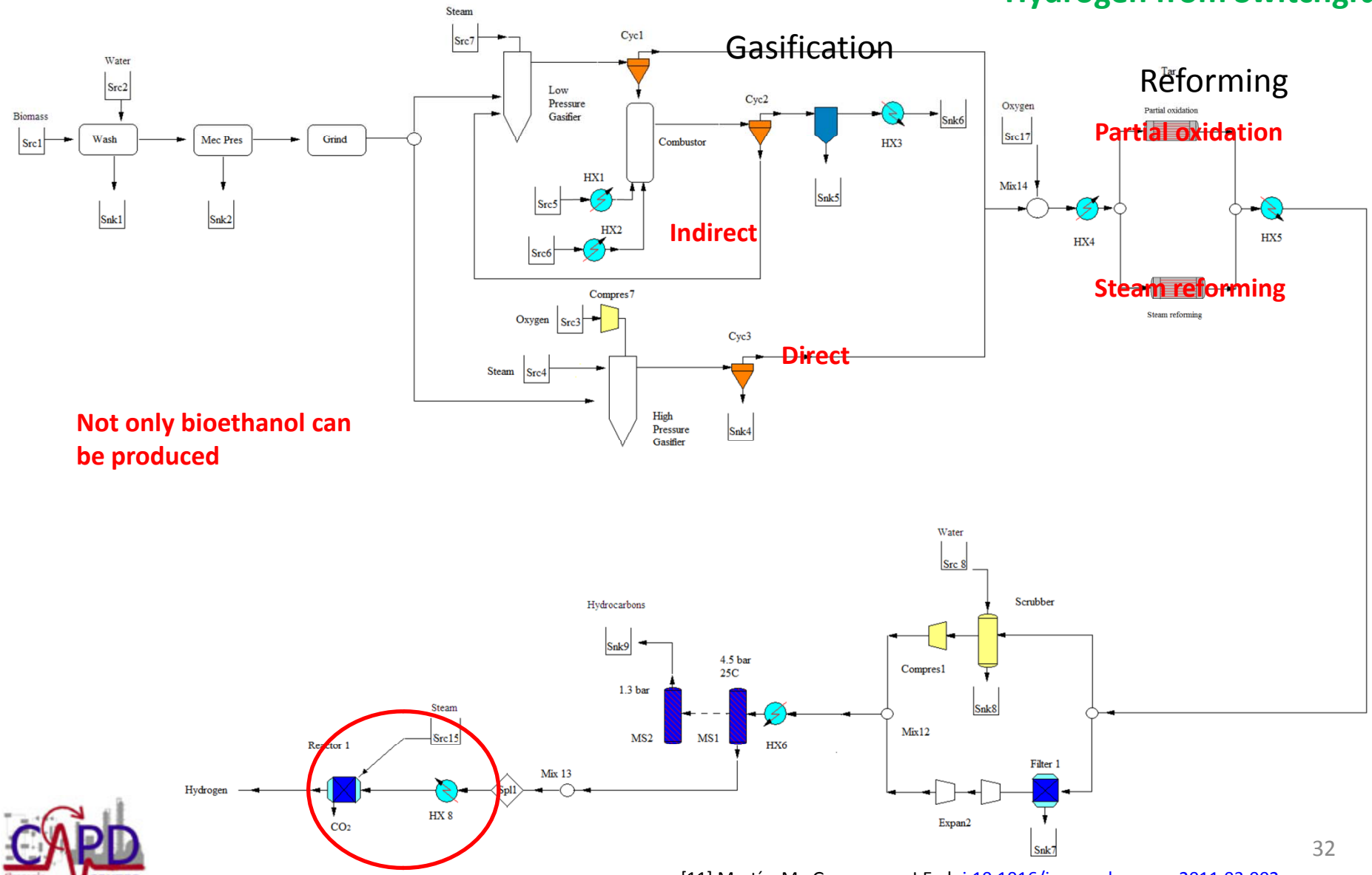

Not only bioethanol can be produced

[11] Martín, M., Grossmann, I.E. doi:10.1016/j.compchemeng.2011.03.002

Results

Hydrogen from Switchgrass

Reduced order model for WGSR

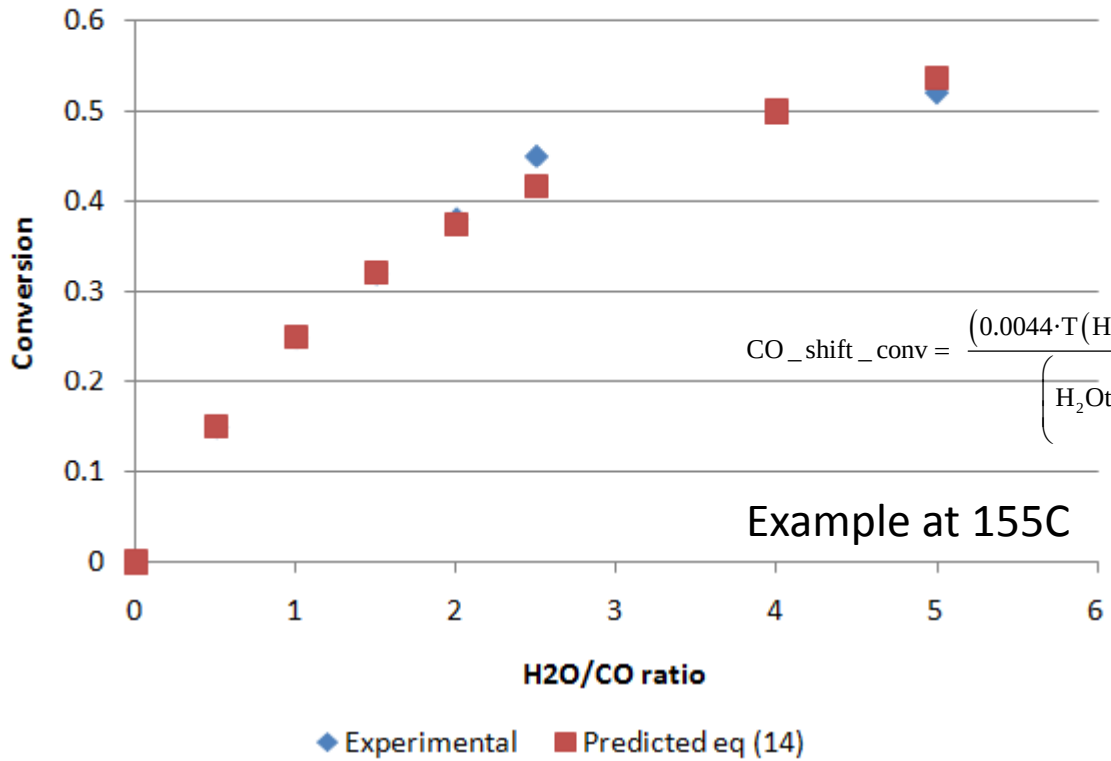

$$CO\_shift\_conv = \frac{\left(0.0044 \cdot T\left(HX8, Reactor1\right) + 0.0924\right) \cdot H_2OtoCO}{\left(H_2OtoCO + \frac{46815}{T\left(HX8, Reactor1\right)^2}\right)};$$

Example at 155C

Choi et al 2003. J. Power Sources 124, 432–439

[11] Martín, M., Grossmann, I.E. doi:10.1016/j.compchemeng.2011.03.002

Results

Hydrogen from Switchgrass

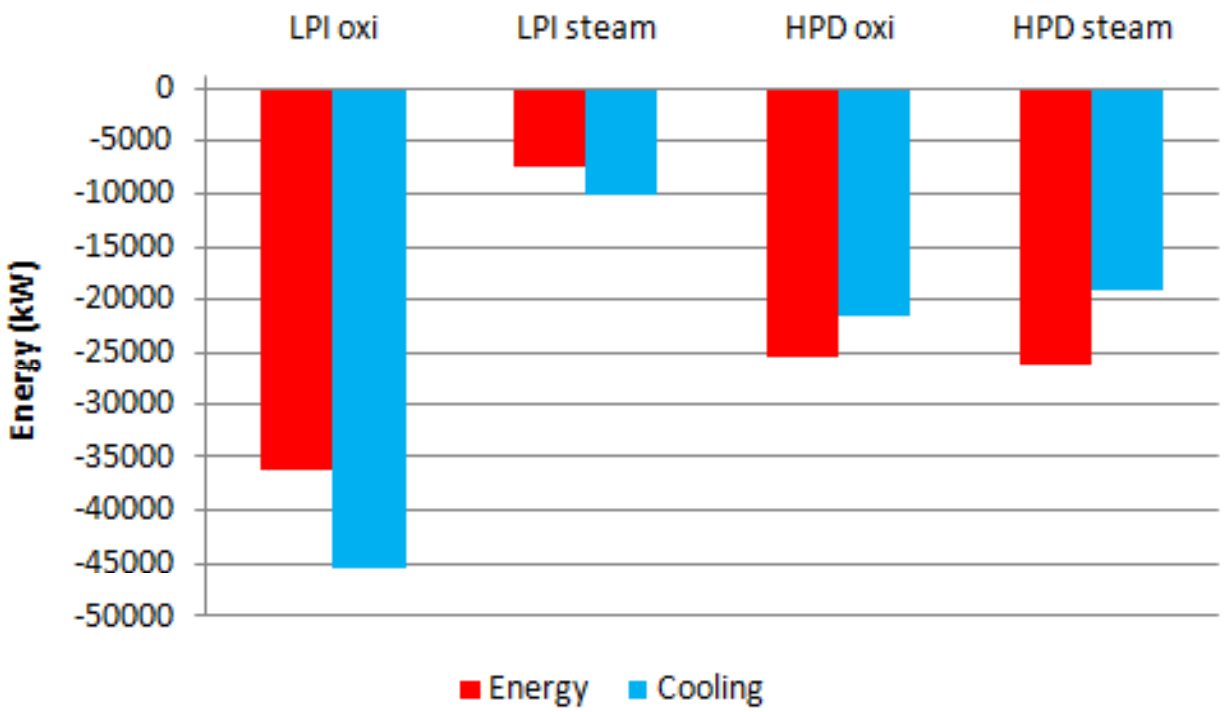

[11] Martín, M., Grossmann, I.E. doi:10.1016/j.compchemeng.2011.03.002

Results

Optimal flowsheet for the production of hydrogen from Switchgrass

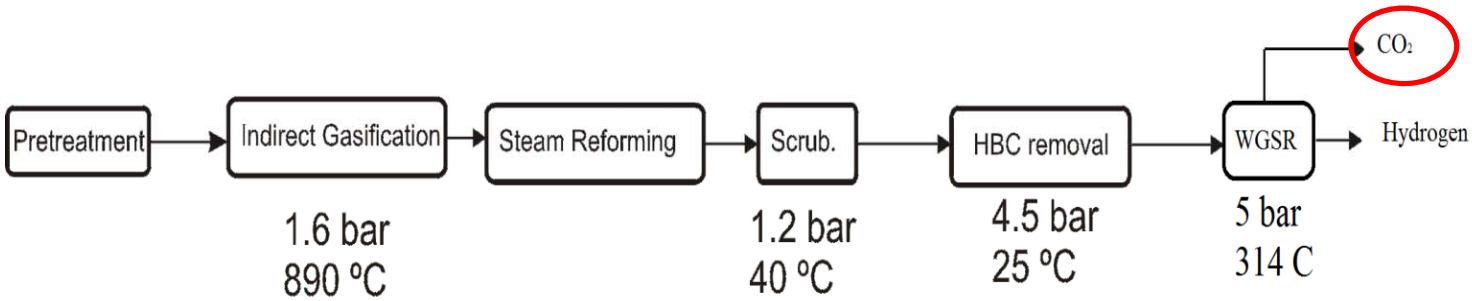

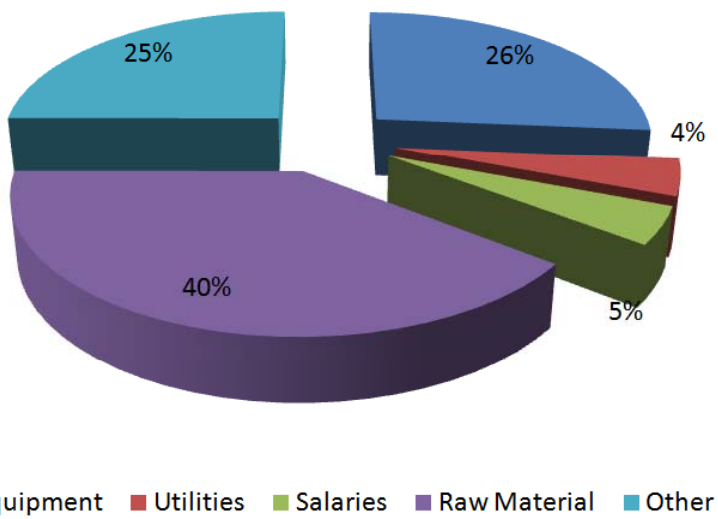

$0.68/kg, $148MM

[11] Martín, M., Grossmann, I.E. doi:10.1016/j.compchemeng.2011.03.002

Results

FT Diesel via gasification of Switchgrass

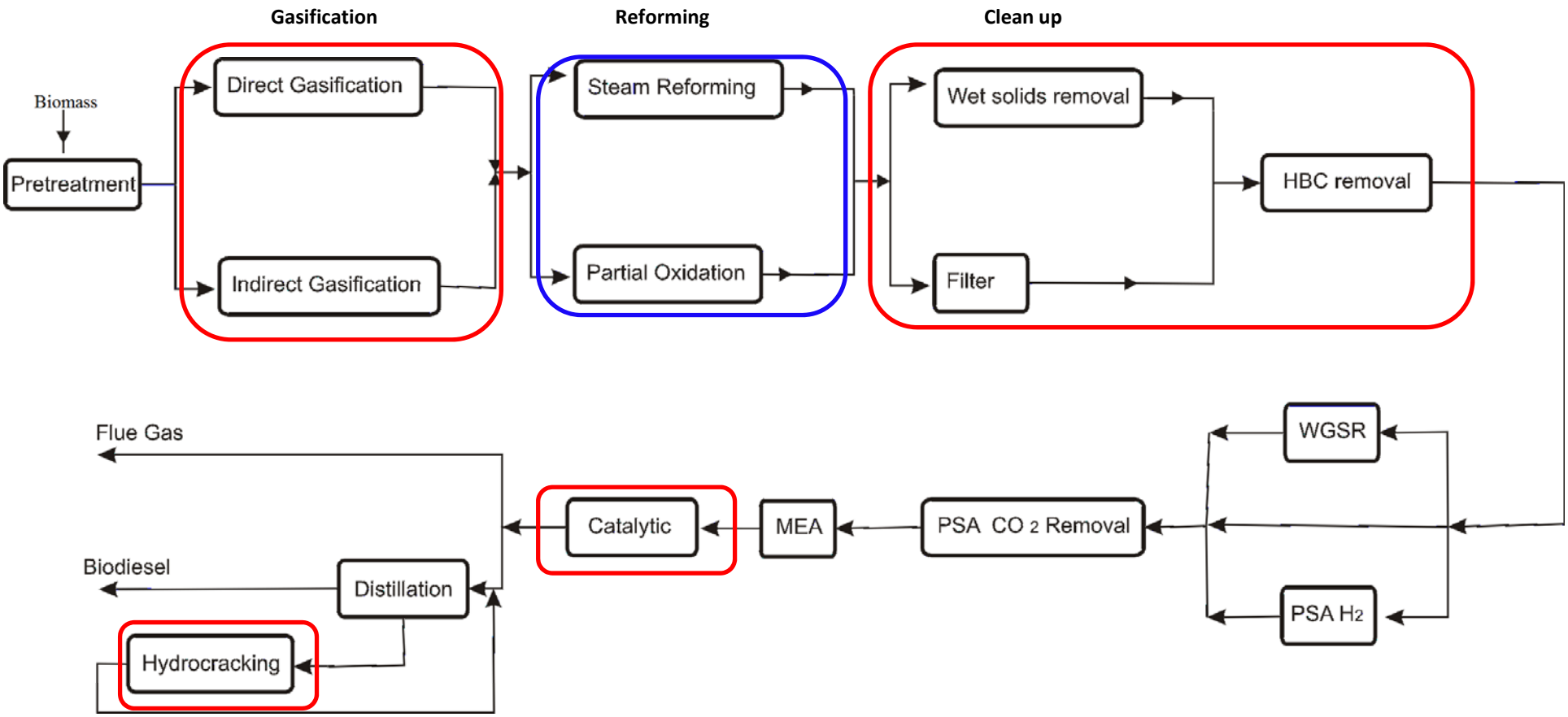

[13] Martín, M., Grossmann, I.E. Process optimization of FT- Diesel production from biomass. To be submitted

Results

FT Diesel via gasification of Switchgrass

FT-Reactor

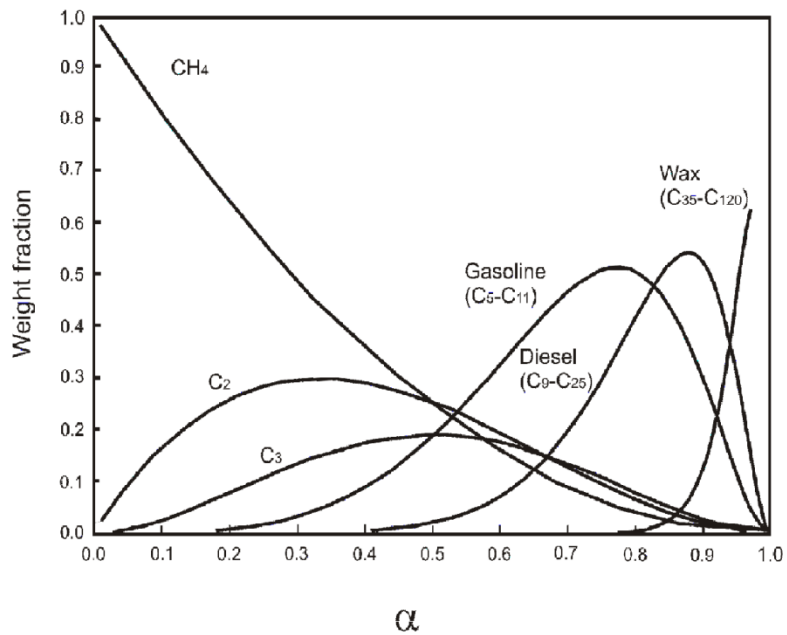

$$\alpha = \left(0.2332 * \left(\frac{y_{co}}{y_{H_2} + y_{co}}\right) + 0.633\right) * \left(1 - 0.0039 * \left(\left(\mathrm{T\_Synthesis} + 273\right) - 533\right)\right)$$

$$w_i = \alpha^{i-1}(1-\alpha)^2 \cdot i$$

Song et al (2004) Korean J. Chem., 21, 308-317.

Hidrocracking

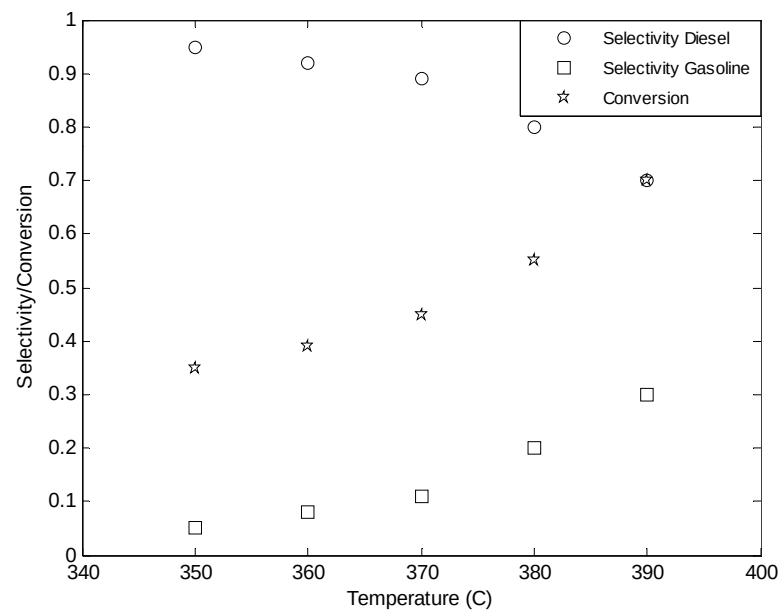

Bezergianni et al. (2009) Bioresour. Technol. 100, 3036–3042

[13] Martín, M., Grossmann, I.E. Process optimization of FT- Diesel production from biomass. To be submitted

Results

FT Diesel via gasification of Switchgrass

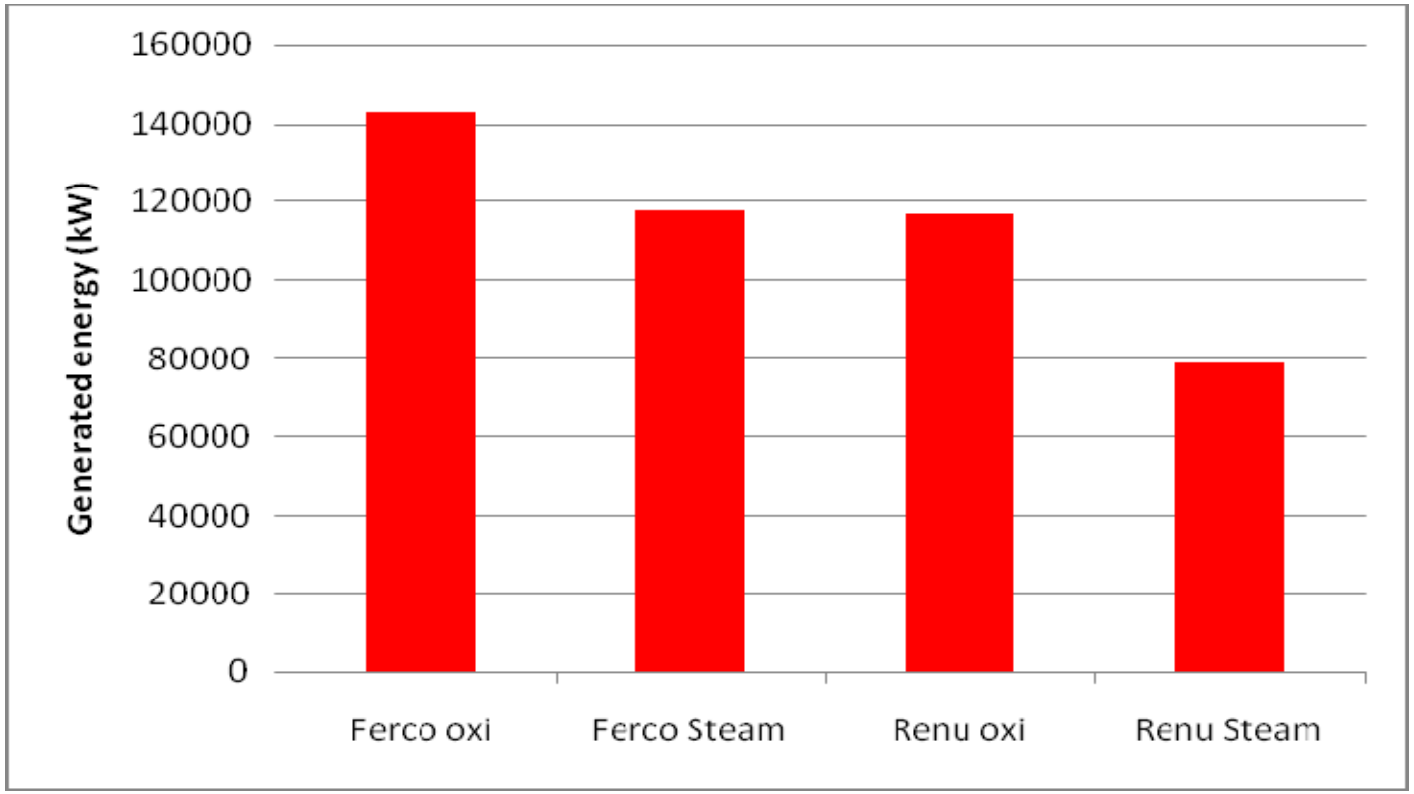

[13] Martín, M., Grossmann, I.E. Process optimization of FT- Diesel production from biomass. To be submitted

Results

Optimal flowsheet for the production of FT Diesel via gasification of Switchgrass

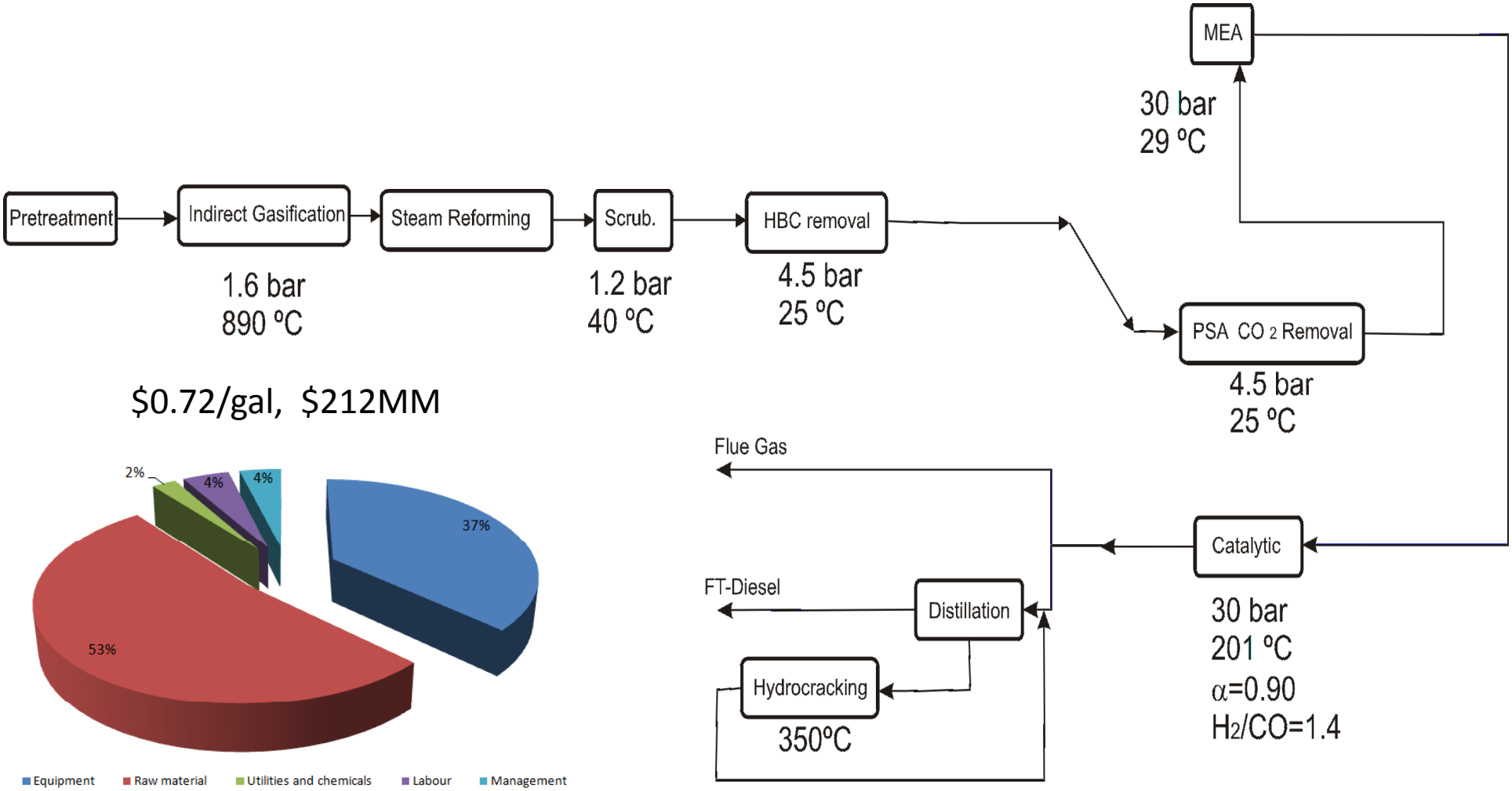

$0.72/gal, $212MM

[13] Martín, M., Grossmann, I.E. Process optimization of FT- Diesel production from biomass. To be submitted

Biodiesel production

Results

Superstructure flowsheet for the production of biodiesel

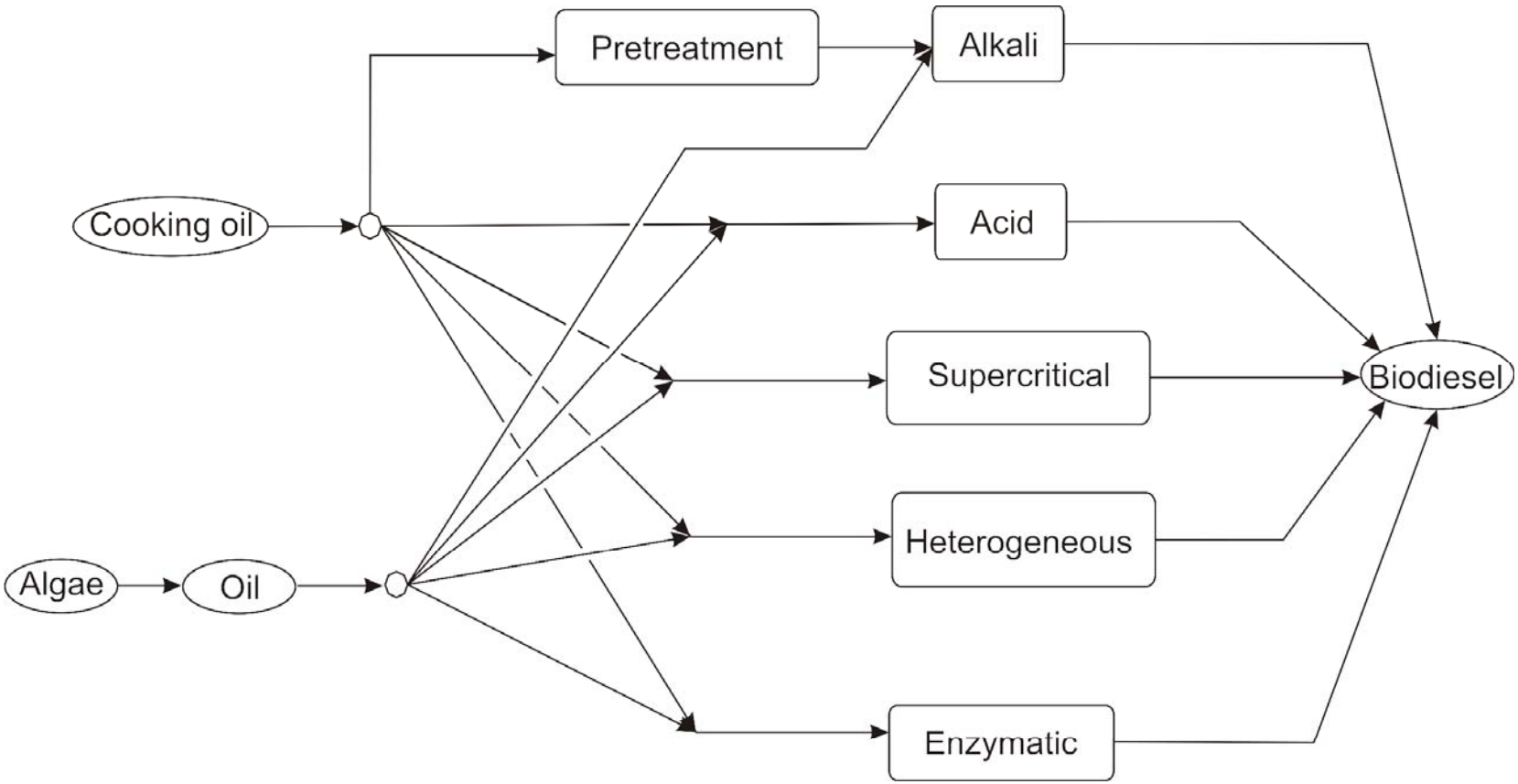

[14] Martín, M., Grossmann, I.E. Process optimization of biodiesel production from cooking oil and Algae. To be submitted

Results

Production of biodiesel from algae

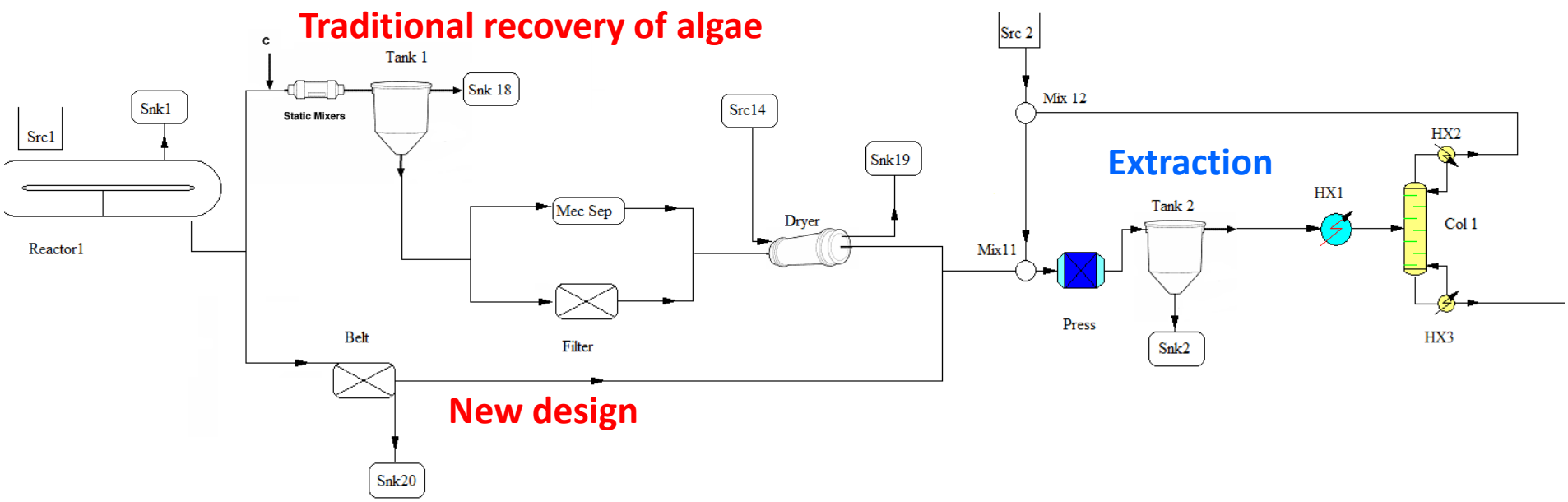

[14] Martín, M., Grossmann, I.E. Process optimization of biodiesel production from cooking oil and Algae. To be submitted

Results

Optimal flowsheet for the production of oil from algae

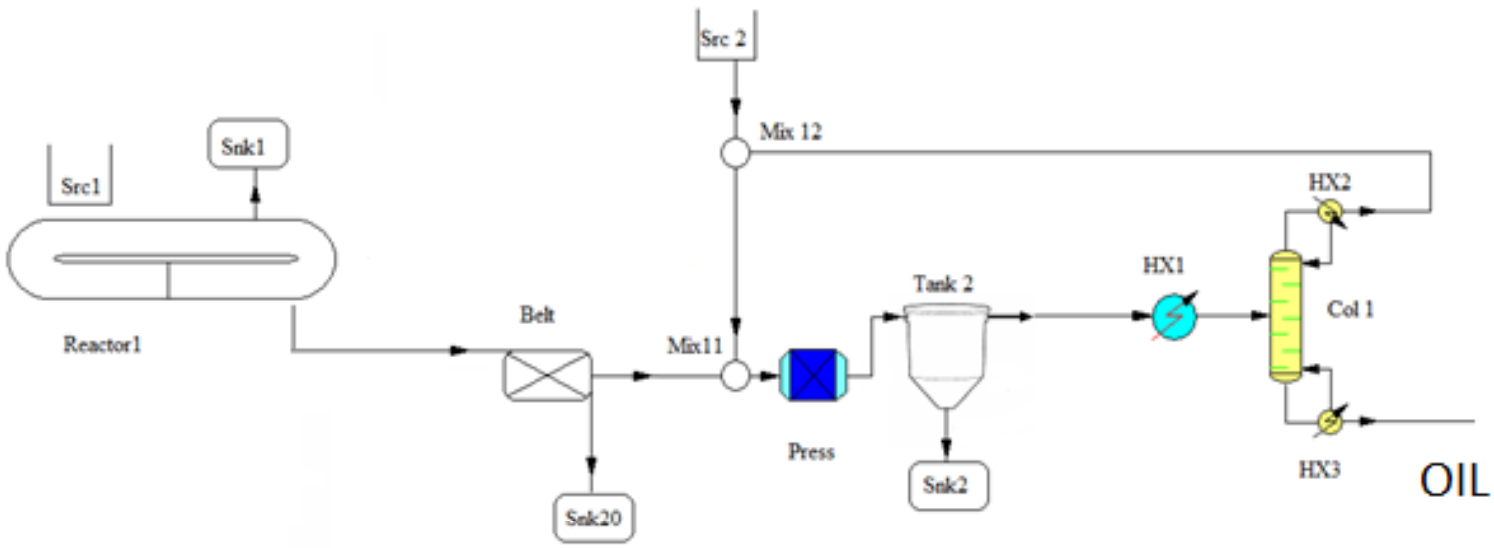

$0.17/kg
$92MM

[14] Martín, M., Grossmann, I.E. Process optimization of biodiesel production from cooking oil and Algae. To be submitted

Results

Production of biodiesel

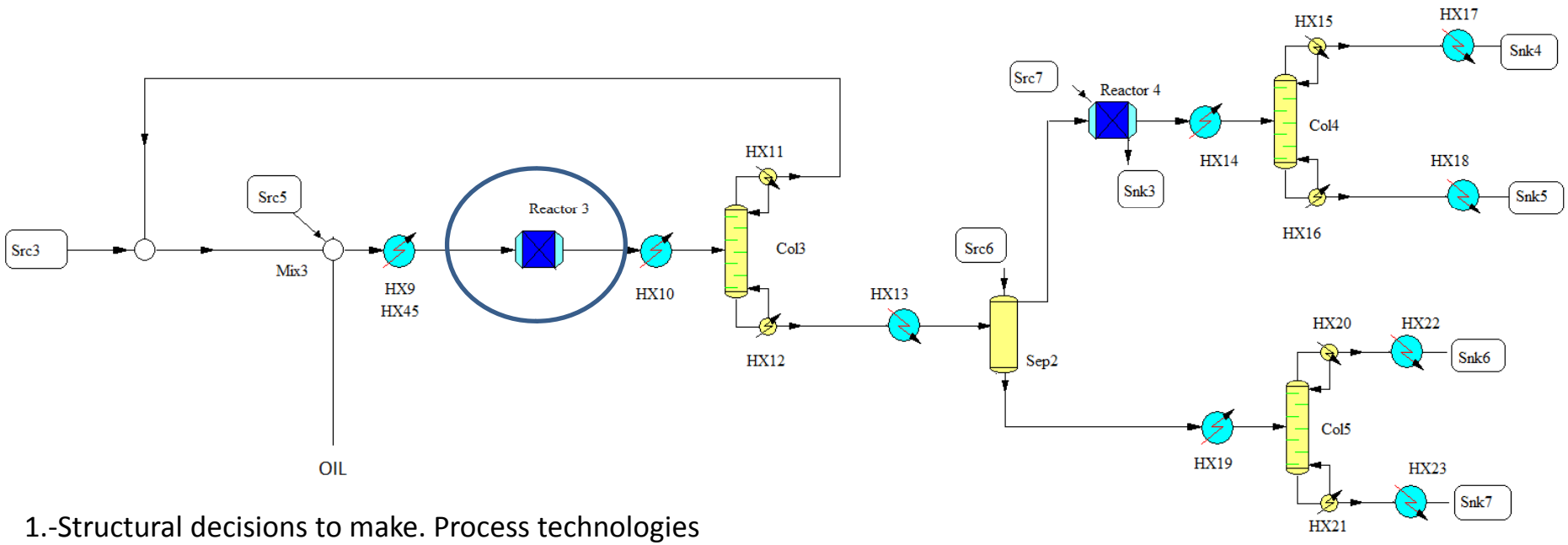

1.-Structural decisions to make. Process technologies

2.-Reactor operating conditions to optimize bioDiesel production

3.-Recycle of excess of methanol

Simultaneous optimization and heat integration of the process

[14] Martín, M., Grossmann, I.E. Process optimization of biodiesel production from cooking oil and Algae. To be submitted

Results

Production of biodiesel

$$\text{yield} = (79.444523 - 1.59614107 * T('HX24','Reactor5') - 3.12722176 * ratio\_met - 1.14234895 * Cat - 0.01193003 * (T('HX24','Reactor5'))^2 + 0.75330856 * (T('HX24','Reactor5')) * Cat + 0.40574243 * (T('HX24','Reactor5')) * ratio\_met + 0.175788313 * Cat^2 - 6.56010529 * Cat * ratio\_met - 0.02509877 * ratio\_met^2);$$

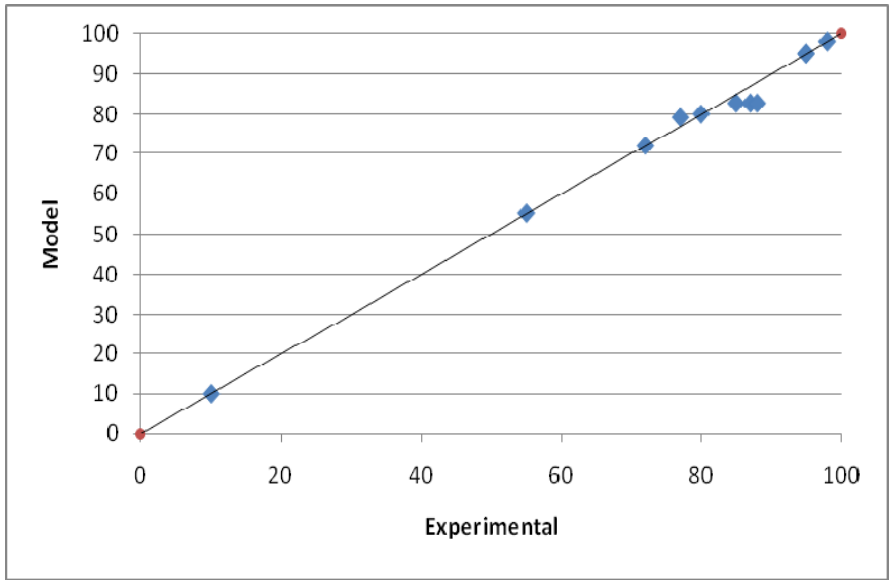

Variable	Lower bound	Upper bound
Temperature (ºC)	25	65
Ratio methanol (mol/mol)	3.3	30
Cat (%)	1	5

Catarci & Kerpen (1999) Trans. ASAE, 42 (5), 1203-1210
Kulkarni & Dalai (2006). Ind. Eng. Chem. Res. 2006, 45, 2901-2913

[14] Martín, M., Grossmann, I.E. Process optimization of biodiesel production from cooking oil and Algae. To be submitted

Results

Production of biodiesel

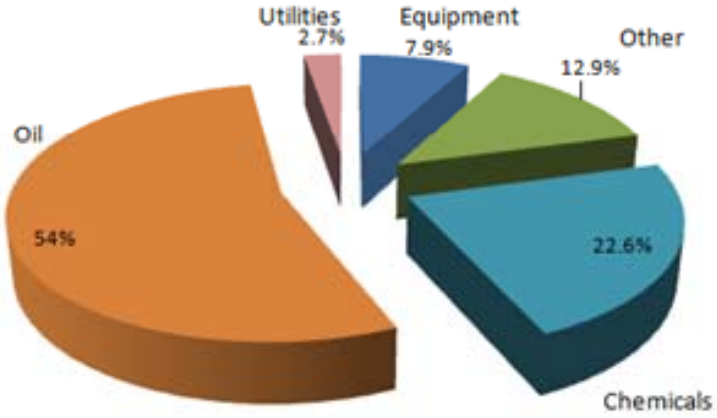

Optimal Algae Oil

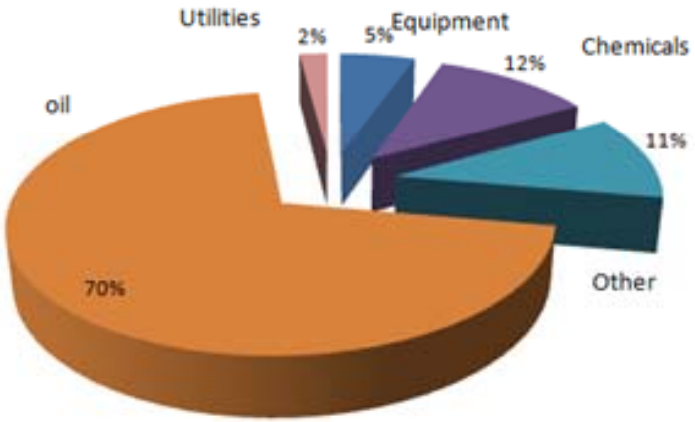

Optimal cooking oil

$0.47/gal
$102MM

$0.70/gal
$17MM

[14] Martín, M., Grossmann, I.E. Process optimization of biodiesel production from cooking oil and Algae. To be submitted

Summary of Results

	Ethanol (Hydrolysis)	Ethanol (Gasification & Catalysis)	Ethanol (Gasification & Fermentation)	FT-Diesel	Hydrogen	Biodiesel (Cooking)	Biodiesel (Algae)
Total investment ($MM)	161	335	260	212	148	17	102
Capacity(MMgal/yr)	60	60	60	60	60*	72	72
Biofuel yield (kg/kg_{wet})	0.28	0.20	0.33	0.24	0.11	0.96	0.48
Production cost ($/gal)	0.80	0.41	0.81	0.72	0.68*	0.70	0.47
Water consumption(gal/gal)	1.66	0.36	1.59	0.15	--	0.33	0.60
Energy consump. (MJ/gal)	-10.2	-9.5	27.2	-62.0	-3.84*	1.94	1.94
Byproduct	Energy CO_2	Hydrogen Energy CO_2	Hydrogen CO_2	Green Gasoline Energy CO_2	Energy CO_2	Glycerol	Glycerol Fertilizer

[10] Martín, M., Grossmann, I.E. (2011) AIChE J. DOI: 10.1002/aic.12544
[11] Martín, M., Grossmann, I.E. Comp. Chem. Eng. doi:10.1016/j.compchemeng.2011.03.002
[12] Martín, M., Grossmann, I.E. Energy optimization of lignocellulosic bioethanol production via Hydrolysis submitted AICHE
[13] Martín, M., Grossmann, I.E. Process optimization of FT- Diesel production from biomass. To be submitted
[14] Martín, M., Grossmann, I.E. Process optimization of biodiesel production from cooking oil and Algae. To be submitted

Conclusions

--Biomass and waste are promising raw material for biofuels.

--The range of biofuels is broad: hydrogen, bioethanol, biodiesel, green gasoline and diesel, biomethanol….

--Mathematical programming techniques offer a powerful tool to synthesize bioprocesses to make them economically attractive and environmentally friendly.

--It is feasible to produce second generation of biofuels but further development is required in purification and reaction technologies to increase water recycle and reuse and increase the yield of the processes.

Acknowledgements

Prof. Grossmann
Dr. Ricardo Lima
Dr. Ramkumar Karuppiah
Dr. Víctor Zavala
Dr? Sebastián Terrazas
Dr? Juan Ruiz
Rosanna Franco
Rodrigo López-Negrete
Lin Lin Yang
Vijay Gupta
Ravi Karmath
Sumit Mitra
Marjtin Van Elzakker
Marcelo Escobar
Prof. Elvis Ahmetovic
Prof. Kravanja
Lidija Cucek
Mabel

Muchas gracias

University of Salamanca

from 1218

Where is the frog?

Just a hint.

For the rest, you have to vist Salamanca