Water Targeting Models for Simultaneous Flowsheet Optimization

- ESI meeting -

Linlin Yang
Advisor: Ignacio E. Grossmann

Department of Chemical Engineering
Carnegie Mellon University

March 11, 2012

Water and energy are important resources in the process industries

"Water is the fastest growing market at the moment, with a size of $500 billion globally."

"If nothing is done, there will be a 40 percent gap between supply and demand by 2030."

Projected Global Water Scarcity, 2025

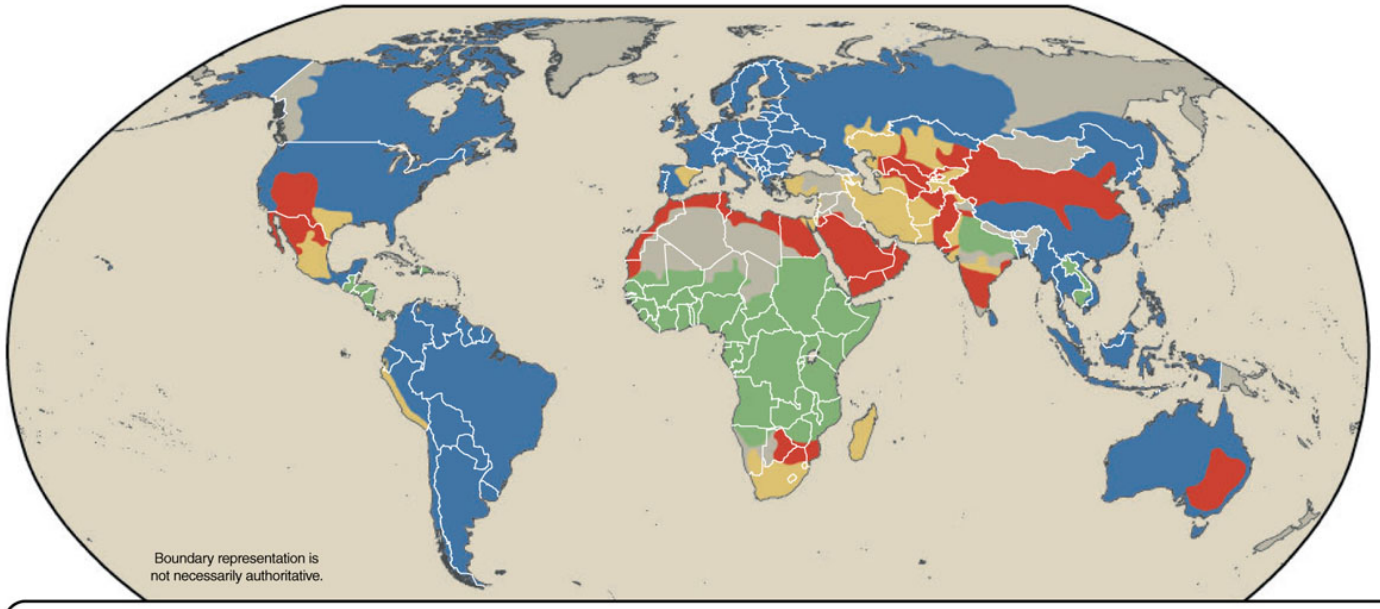

Physical water scarcity: More than 75% of river flows are allocated to agriculture, industries, or domestic purposes. This definition of scarcity — relating water availability to water demand — implies that dry areas are not necessarily water-scarce.

Approaching physical water scarcity: More than 60% of river flows are allocated. These basins will experience physical water scarcity in the near future.

Economic water scarcity: Water resources are abundant relative to water use, with less than 25% of water from rivers withdrawn for human purposes, but malnutrition exists.

Little or no water scarcity: Abundant water resources relative to use. Less than 25% of water from rivers is withdrawn for human purposes.

Not estimated

Source: International Water Management Institute.

Conventional water network

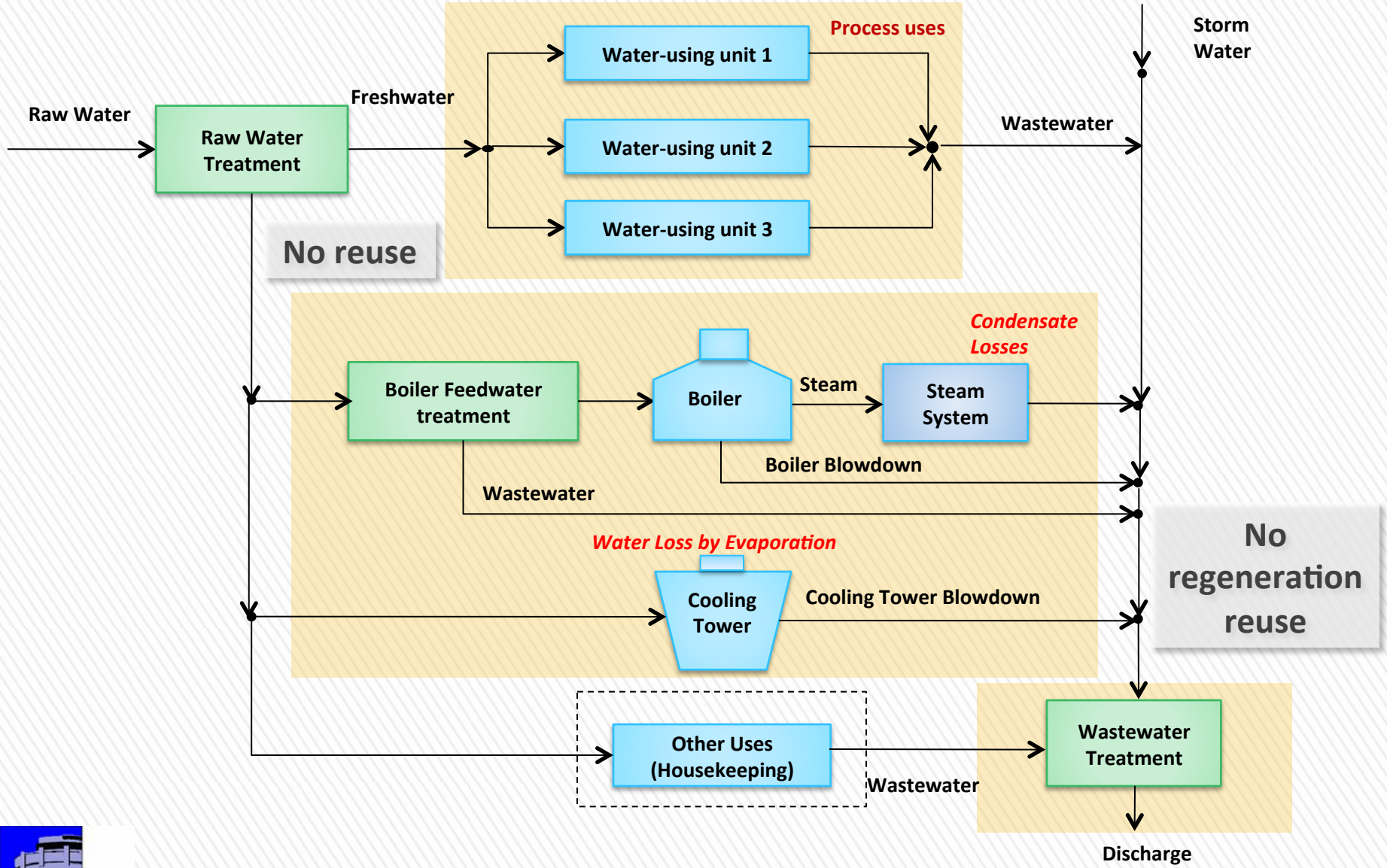

Superstructure based water network design

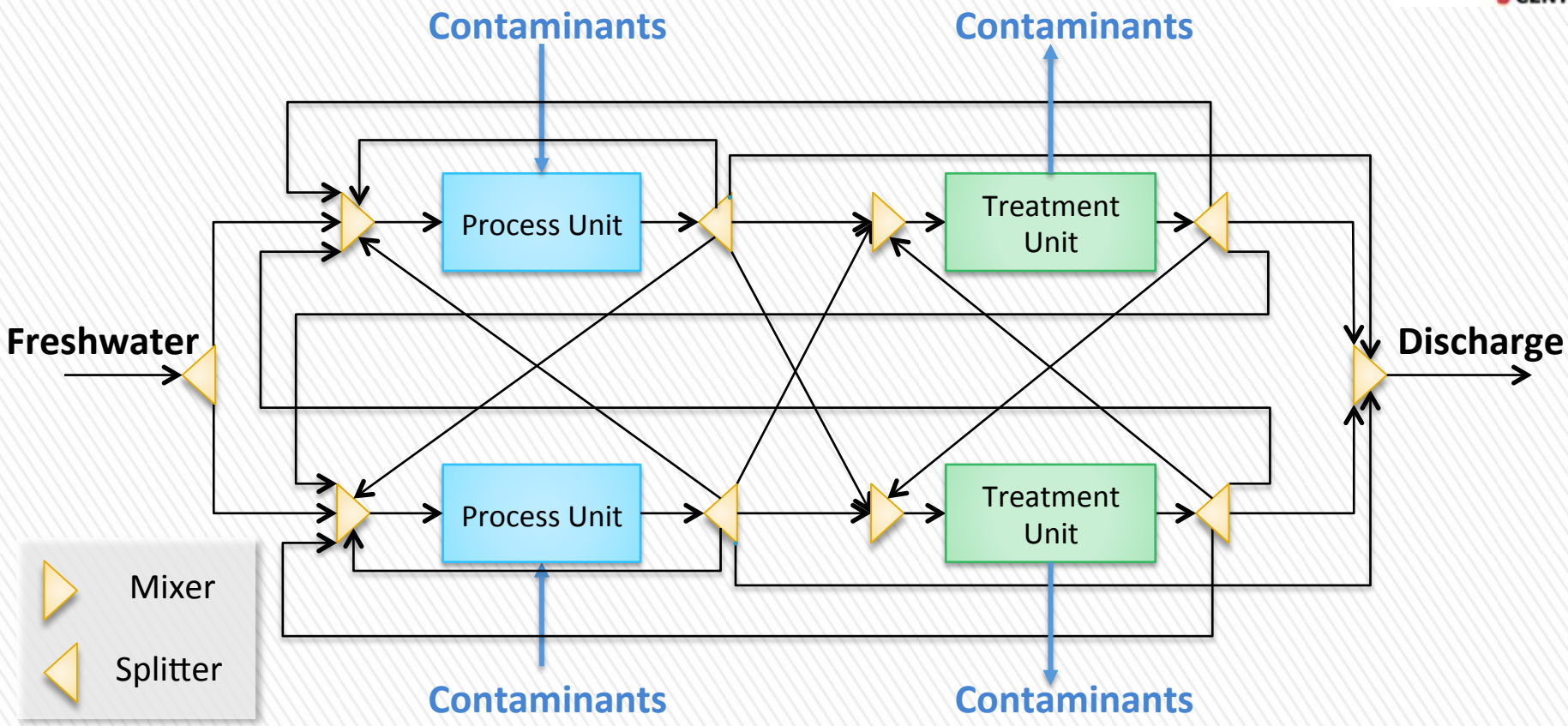

» Integrated water network with reuse, recycle, and regeneration schemes

» superstructure is formulated using a **nonconvex NLP** model

Karuppiah & Grossmann (2006); Ahmetovic & Grossmann (2010)

Freshwater targeting formulation

Goal: determine minimum freshwater consumption

(LP)

$$\min \quad Z = F_{fw}$$

$$\text{s.t.} \quad F^k = \sum_{i \in m_{in}} F^i \qquad \forall m \in MU, k \in m_{out}$$

$$F^k C_j^{k,\max} \geq \sum_{i \in m_{in}} (F^i C_j^{i,\max} + F_{fw}^i C_{fw}) \quad \forall j, \quad \forall m \in MU, k \in m_{out}$$

Mixer mass balances

$$F^k = \sum_{i \in s_{out}} F^i \qquad \forall s \in SU, k \in s_{in}$$

$$C_j^k = C_j^i \qquad \forall j, \quad \forall s \in SU, \qquad \forall i \in s_{out}, k \in s_{in}$$

Splitters mass balances

$$F^k = P_{in}^p \qquad \forall p \in PU, k \in p_{out}$$

$$F^i = P_{out}^p \qquad \forall p \in PU, i \in p_{in}$$

$$F^i C_j^i + L_j^p = F^k C_j^k \quad \forall j, \forall p \in PU, i \in p_{in}, k \in p_{out}$$

Process unit mass balances

This formulation provides target for a network consists of a set of water-using process units using linear constraints

Assumption: for some contaminant j that reaches its concentration upper bound at a given unit, it also reaches the upper bound at all other process units from which reuse streams have non-zero flowrate

Heat-integrated WN reported in the literature

Use heat and water network formulation **(MINLP model)** to obtain network structure

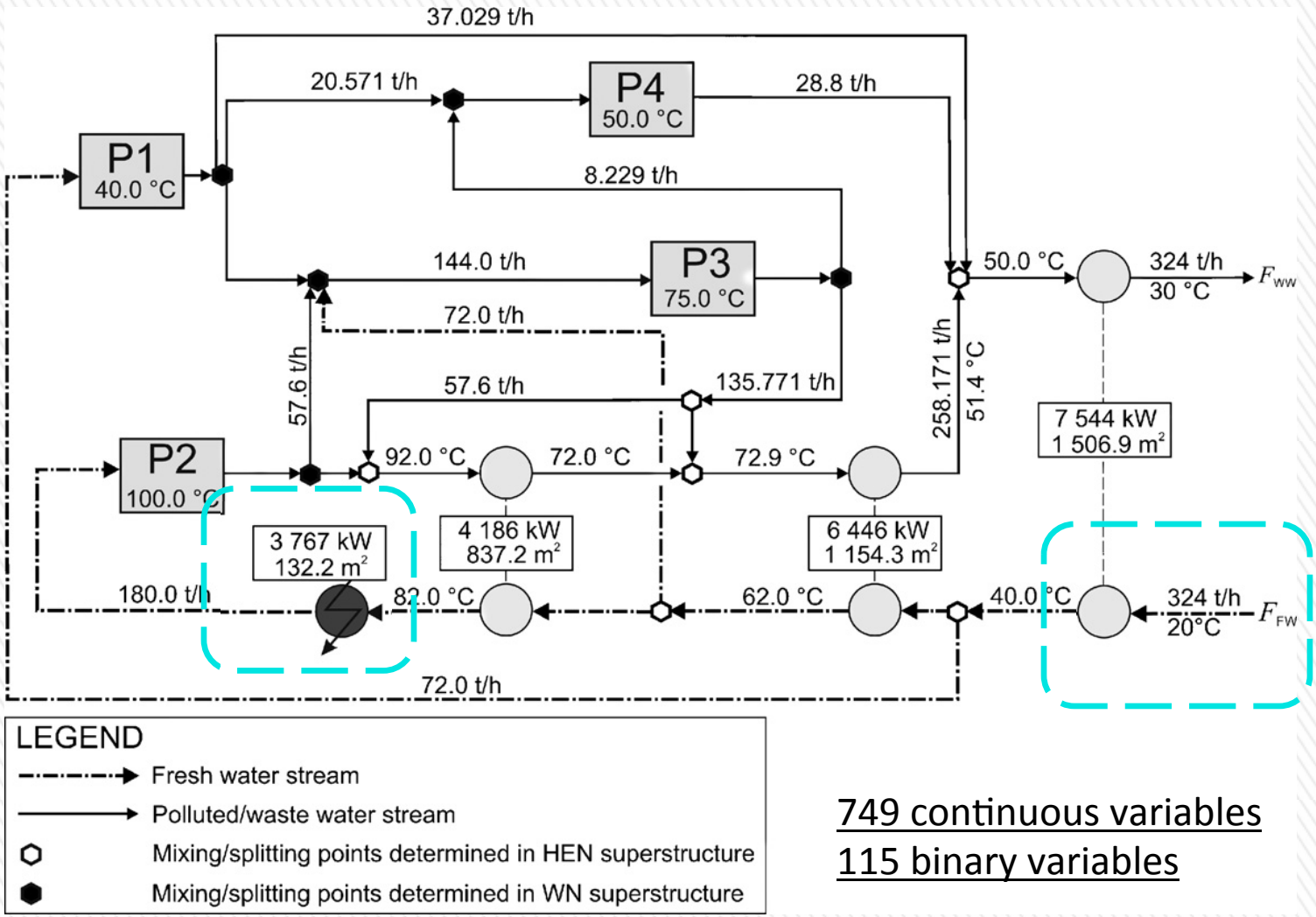

749 continuous variables
115 binary variables

Bogataj & Bagajewicz (2007)

Extension: heat-integrated water network

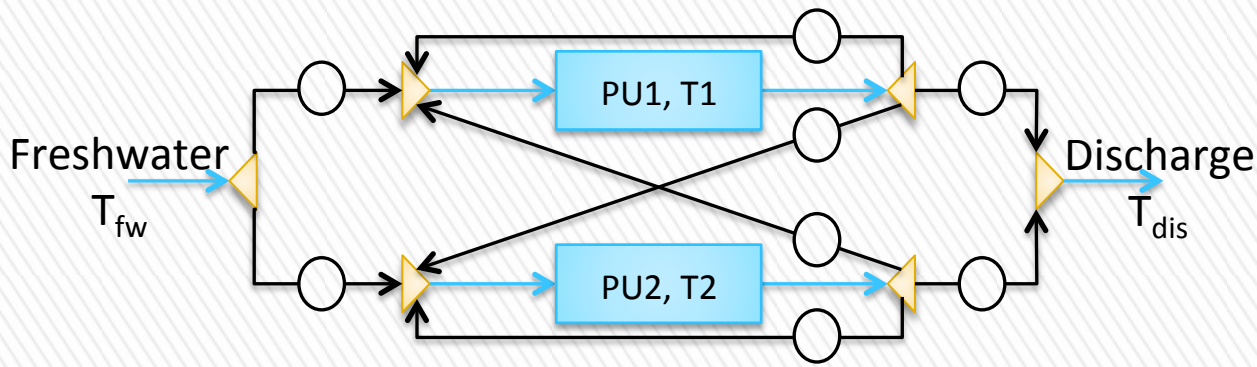

All black streams can participate in heat integration

Objective fcn

$$\min.\ \phi = c_H Q_H + c_C Q_C + c_{fw} F_{fw}$$

Water targeting (LP)

$$F^k = \sum_{i \in m_{in}} F^i \qquad \forall m \in MU, k \in m_{out}$$

$$F^k C_j^{k,\max} \geq \sum_{i \in m_{in}} (F^i C_j^{i,\max} + F_{fw}^i C_{fw})$$

$$\forall j, \quad \forall m \in MU, k \in m_{out}$$

$$F^k = \sum_{i \in s_{out}} F^i \qquad \forall s \in SU, k \in s_{in}$$

$$C_j^k = C_j^i \qquad \forall j, \quad \forall s \in SU, \quad \forall i \in s_{out}, k \in s_{in}$$

$$F^k = P_{in}^p \qquad \forall p \in PU, k \in p_{out}$$

$$F^i = P_{out}^p \qquad \forall p \in PU, i \in p_{in}$$

$$F^i C_j^i + L_j^p = F^k C_j^k$$

$$\forall j, \forall p \in PU, i \in p_{in}, k \in p_{out}$$

Heat targeting (LP)

$$Q_H \geq \sum_{js \in C \cup s_{out}} f_{js} c_{js} [\max\{0, t_{js}^{out} - (T^p - \Delta T_m)\}$$

$$- \max\{0, t_{js}^{in} - (T^p - \Delta T_m\}]$$

$$- \sum_{is \in H \cup s_{out}} F_{is} C_{is} [\max\{0, T_{is}^{in} - T^p)\}$$

$$- \max\{0, T_{is}^{out} - T^p\}]$$

$$Qc = Q_H + \sum_{is \in H \cup s_{out}} F_{is} C_{is} (T_{is}^{in} - T_{is}^{out})$$

$$- \sum_{js \in C \cup s_{out}} f_{js} c_{js} (t_{js}^{out} - t_{js}^{in})$$

$$T^p = T_{is}^{in} \qquad \forall p = is \in H \cup s_{out} \quad \forall s \in SU$$

$$T^p = (t_{js}^{in} + \Delta T_m) \qquad \forall p = js \in C \cup s_{out} \quad \forall s \in SU$$

Revisit: heat-integrated water network utility targeting

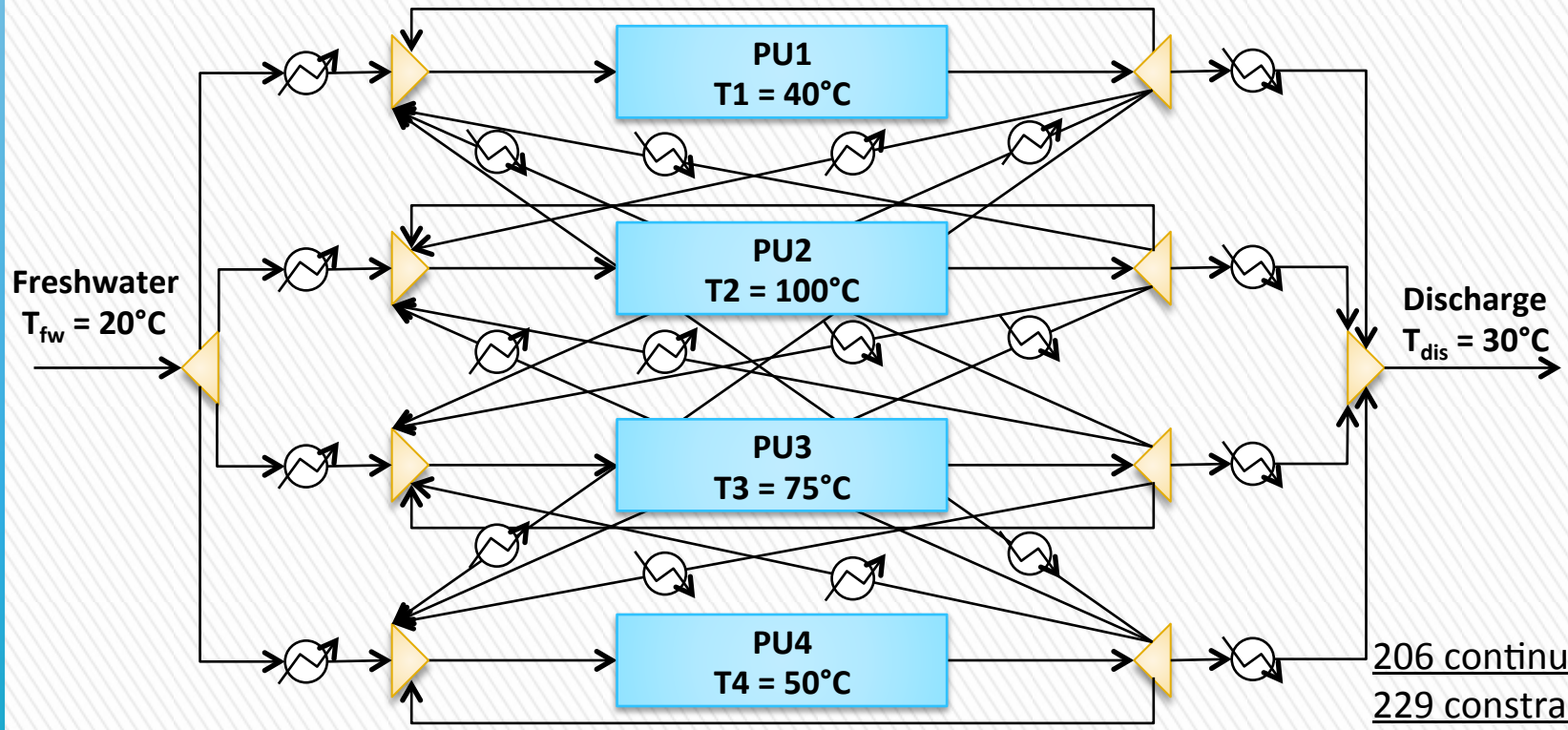

206 continuous variables
229 constraints

Parameter			
C_{HU} ($/kW a)	260	T_{HU}^{in} (°C)	126
C_{CU} ($/kW a)	150	T_{HU}^{out} (°C)	126
C_{FW} ($/t)	2.5	T_{CU}^{in} (°C)	15
HRAT (°C)	10	T_{CU}^{out} (°C)	20

Use heat and water targeting formulation:

Minimum heating utility: 3767 kW
Minimum cooling utility : No cooling utility required
Minimum freshwater consumption: 324 ton/h

Same result as network approach

Simultaneous optimization strategy

$$\min.\ \phi = F(x,u,v) + \sum_{i \in HU} c_H^i Q_H^i + \sum_{j \in CU} c_C^j Q_C^j + c_{fw} F_{fw}$$

$$\text{s.t. } h(x,u,v) = 0$$

$$g^P(x,u,v) \le 0$$

$$g^{HEN}(u, Q_H, Q_C) \le 0$$

$$g^{WN}(v, F_{fw}) \le 0$$

$$x \in X, \quad u \in U, \quad v \in V$$

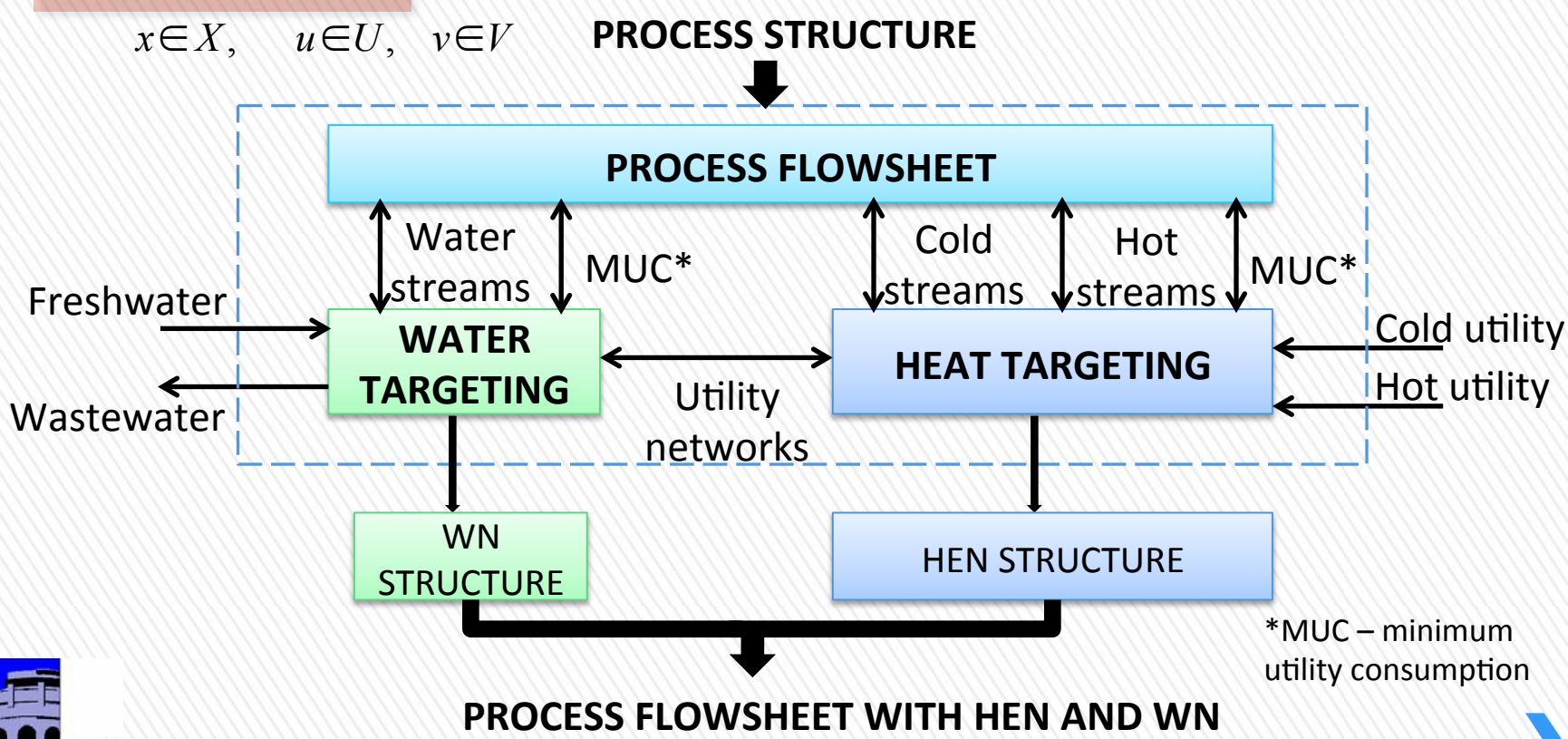

*MUC – minimum utility consumption

Simultaneous optimization: methanol synthesis from syngas

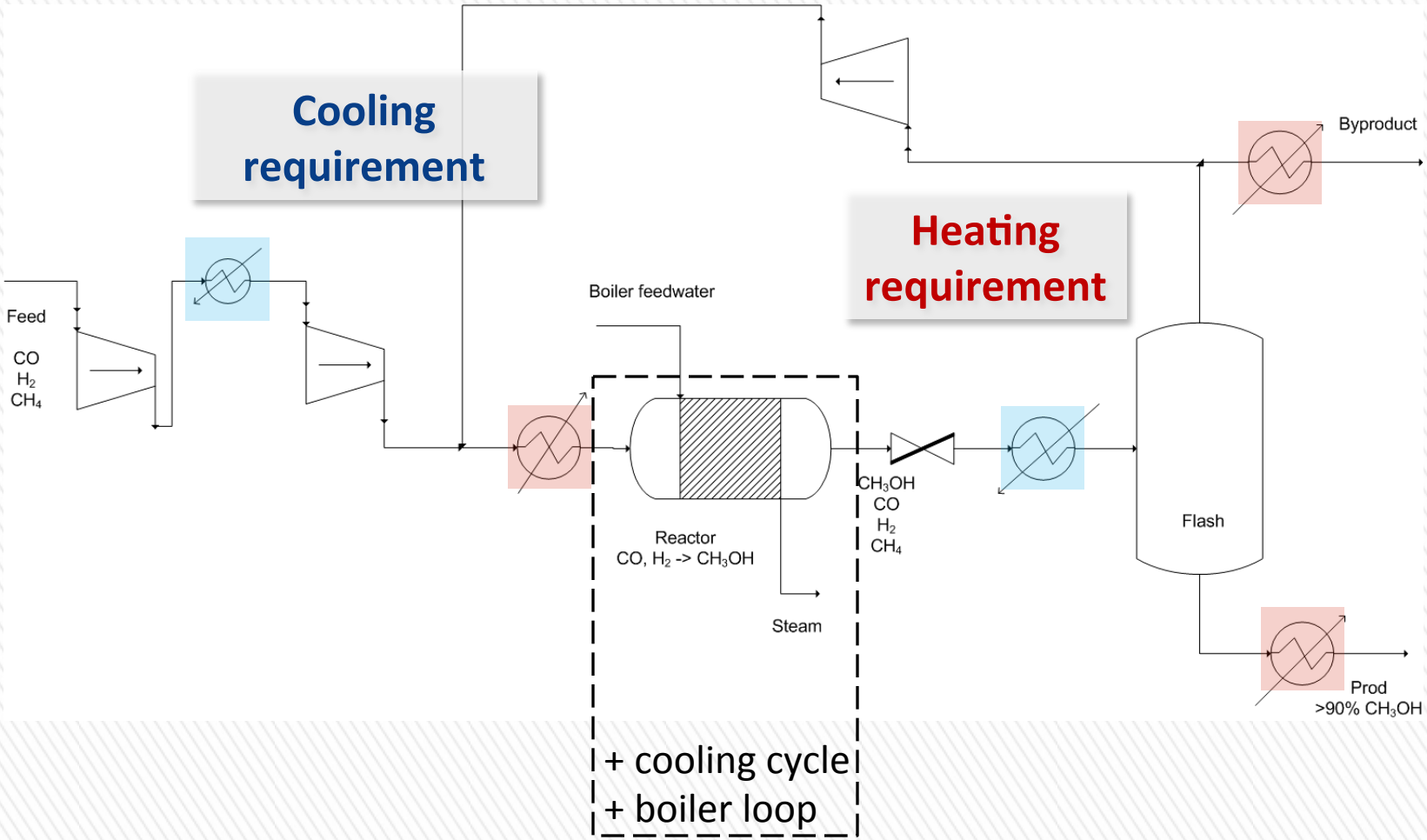

Freshwater requirement

Duran & Grossmann (1987)

Sequential vs. simultaneous result comparison

		SEQUENTIAL	SIMULTANEOUS
Profit	**(1000 $/yr)**	**62,695**	**73,416**
Investment cost	(1000 $)	1,891	1,174
Operating parameters			
	electricity (KW)	6.59	1.84
	freshwater (kg/s)	36.43	29.25
	heating utility (10^9 KJ/yr)	0.293	0
	cooling utility (10^9 KJ/yr)	67.3	72.7
	Steam generated (10^9 kJ/yr)	2448	1965
	overall conversion	0.68	0.88
Material flowrate (10^6 kmol/yr)			
	feedstock	48.04	37.13
	product	10.89	10.89

Solved with BARON 9

17% improvement

Example 2: Bioethanol production

Water Consumption and generation

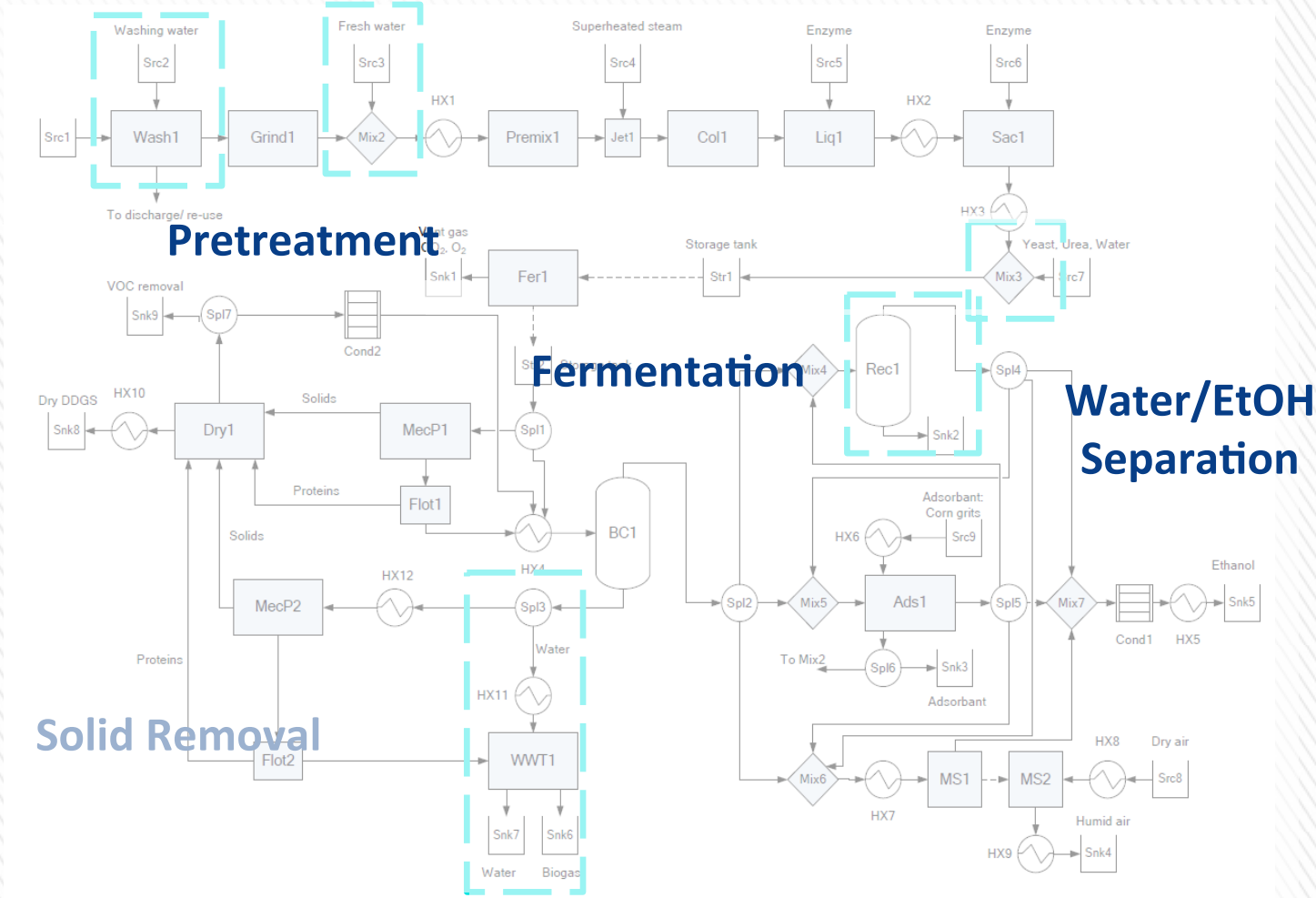

R. Karuppiah, A. Peschel, I. E. Grossmann, M. Martin, W. son, and L. Zullo, "Energy optimization for the design of corn-based ethanol plants," AIChE Journal, vol. 54, no. 6, 2008, pp. 1499–1525.

Water network superstructure

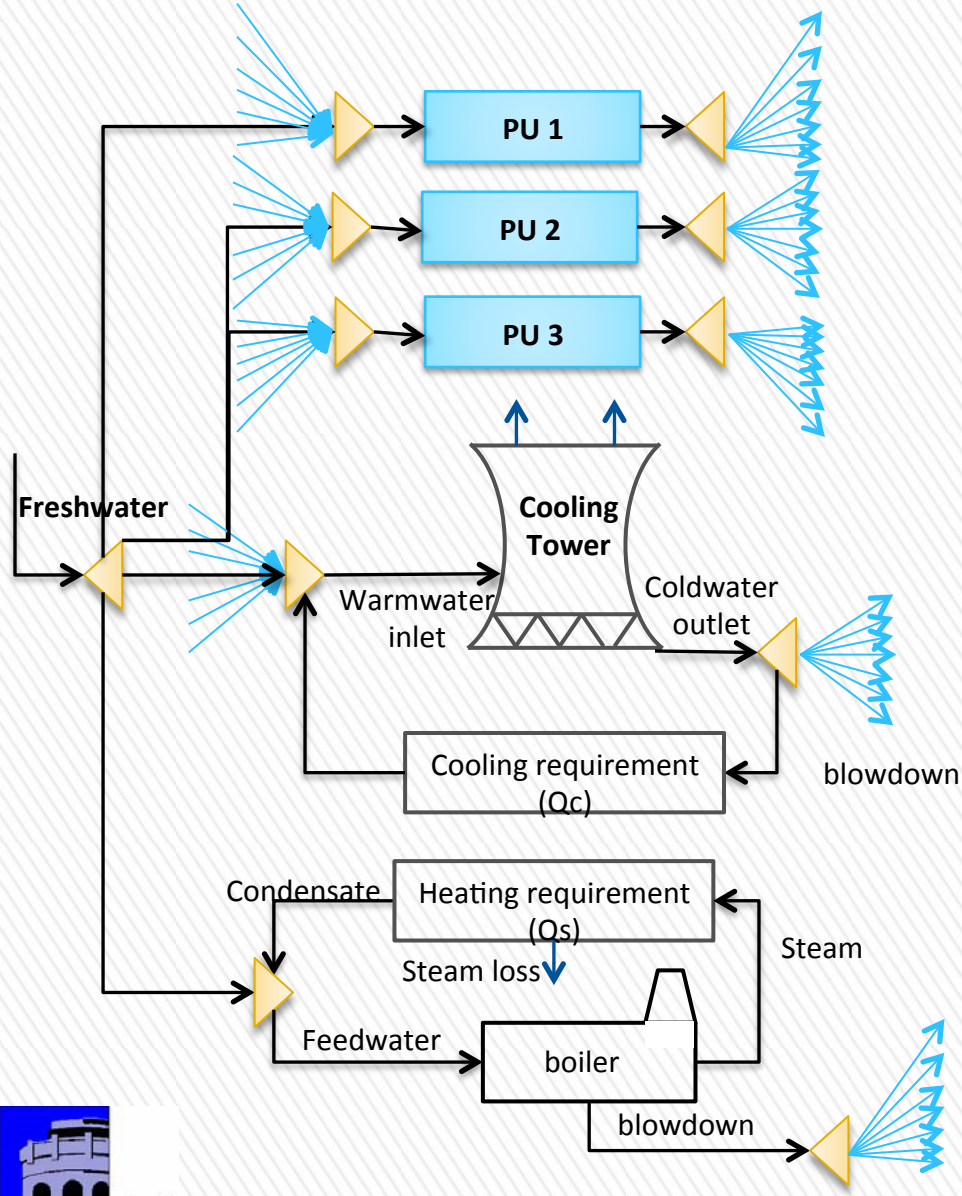

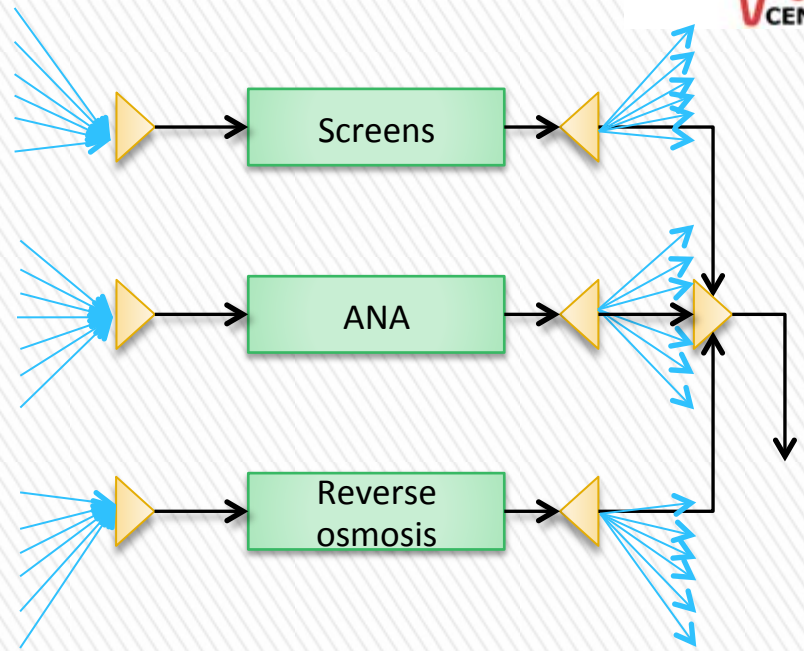

$C_j^{in,max}$ (ppm)	TSS	TDS	ORG
Boiler loop	2	100	10
Cooling cycle	10	500	10
$1-B_j^t$			
Screens	95%	0	0
Reverse osmosis	0	90%	0
Anaerobic tank	0	0	99%

Multieffect columns

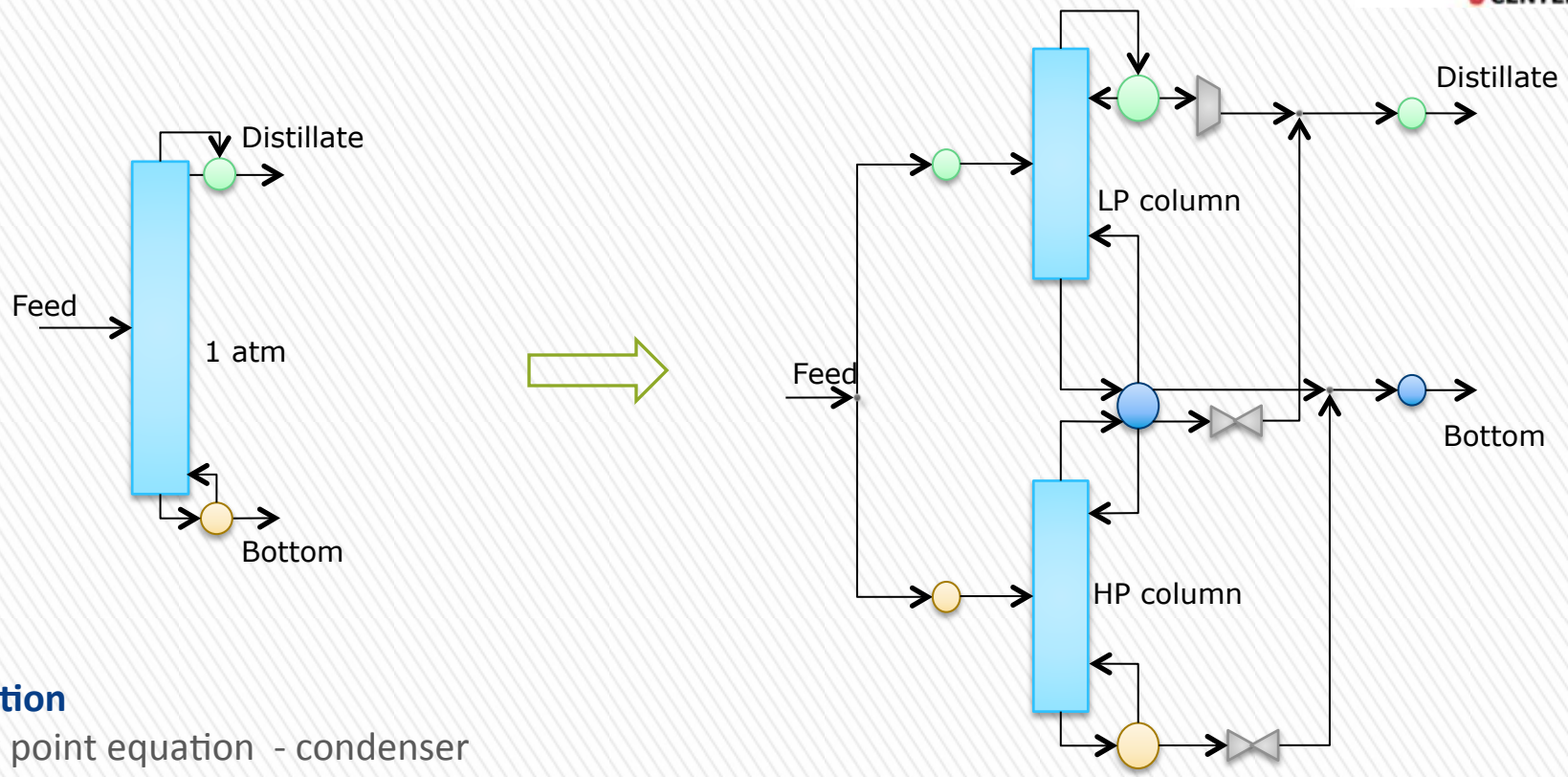

Formulation

- > Dew point equation - condenser temperature
- > Bubble point equation - feed and reboiler temperature
- > Fenske equation - # of trays
- > Watson's equation – heat of vaporization
- > Mass balance
- Energy balance

Assumptions

- > Constant relative volatility
- > Ideal solution
- > Water is the only component contributing to heat of vaporization
- > Temperature change due to pumps is negligible

Result

	No integration	Sequential single column	Sequential w/ multieffect	Simultaneous w/ Multieffect
Cost (MM$/yr)	**14.91**	**11.77**	**8.57**	**8.57**
Cooling water use (kg/s)	2895.6	1998.3	1127.3	1124.8
Freshwater use (kg/s)	40.8	127.6	90.0	90.0
Steam use (kg/s)	35.1	28.3	21.2	21.3
CPU(s)	387	387	470	563
# eqns	2,232	2,232	3,213	5,221
# cont var	2,921	2,921	3,914	5,392

NLP solver: CONOPT 3
MINLP solver: BARON 9
GAMS 23.7

Even though the objective function did not improve using simultaneous method, we can see that the solution time did not increase drastically

Reboiler duty reduced by ~36% by with multieffect column

Utility integration – power, water, & heat

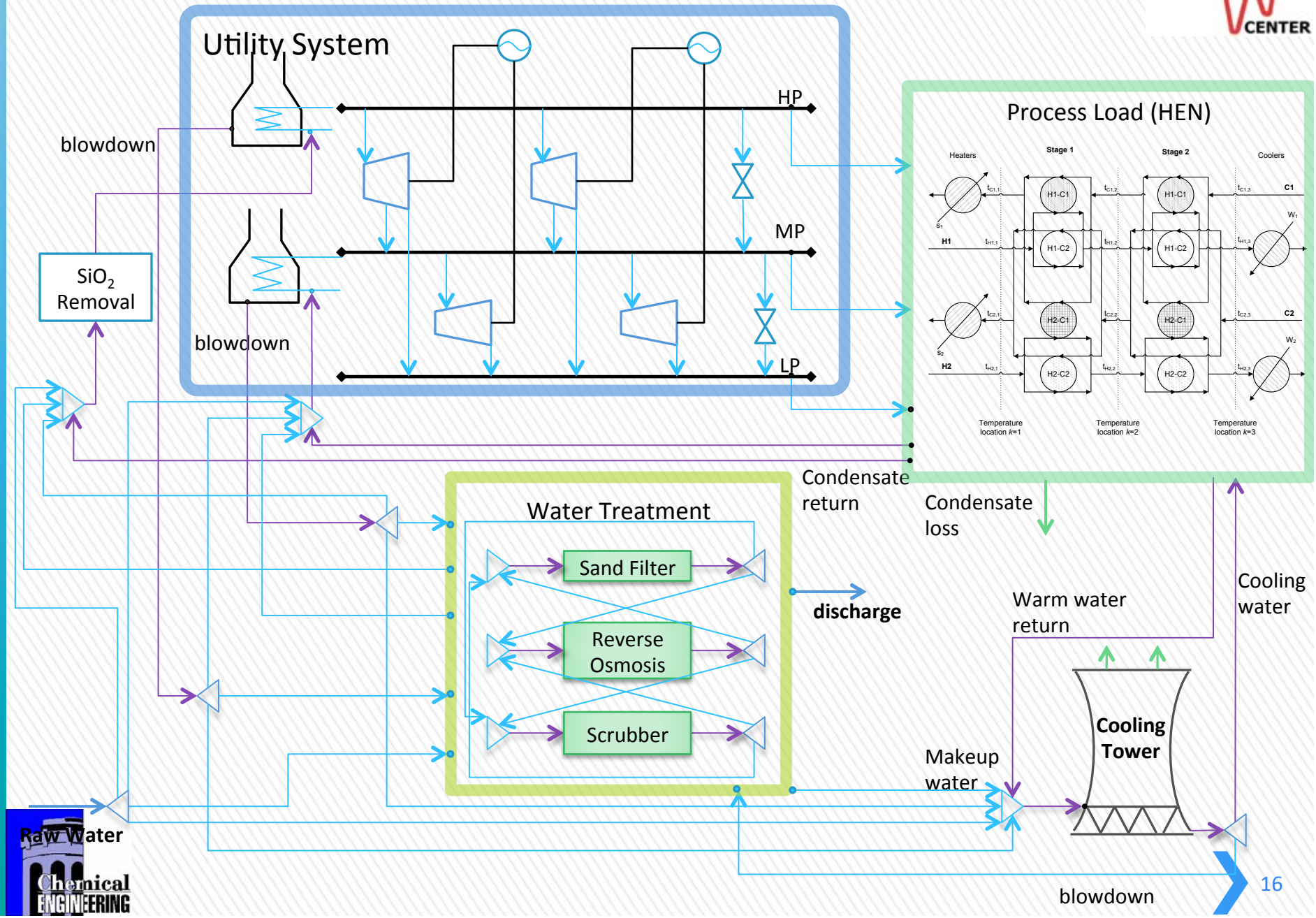

Problem statement

Objective function

$$\phi = \underbrace{\sum_{st} c_b^{fix} Y_b^{st} + \sum_{st} c_b^{\text{var}} F_b^{st} + \sum_{st}}_{\text{Boiler cost}} \underbrace{\sum_{d} c_{tur}^{fix} Y_d^{st} + \sum_{d} c_{ext}^{fix} Y_d^{ext} + \sum_{st} \sum_{d} c_{tur}^{\text{var}} W_d^{st}}_{\text{Turbine cost}} + \underbrace{\sum_{s} c_s F_s}_{\text{Flowsheet stream cost}} + \underbrace{c_{fw} F_{fw}}_{\text{freshwater cost}}$$

HEN	Utility system	WN
• 2 hot streams/ 2 cold streams • Inlet and outlet temperature can vary within +/- 10 K • Heat capacity flowrate can vary within 20% • Two treams have assigned costs • Hot utility - HP, MP, and LP steam • Cold utility - cooling water	• Existence of boiler • Existence of turbine • Back pressure turbine • Extraction turbine (additional cost $20,000) • Flowsheet power demand (7500kW) • 70% condensate return	• HP boiler has more stringent feedwater requirement • HP boiler/MP boiler have different blowdown rates • RO consumes electricity • Raw water needs treatment • TSS, TDS, GAS present in freshwater • Discharge limit imposed

Multiple hot utility targeting (Duran & Grossmann)

- Heating utilities targets
- Cooling utility target

Utility system

- Logical constraints
- Demand constraints
- Power balances
- Mass balances

Water network

- Mass balances
- Power demand constraint

Result

	Sequential		Simultaneous	
Cost (1000 $ / yr)		**884.2**		**641.5**
Utility				
HP boiler flowrate (kg/s)	Yes	17.66	Yes	18.20
MP boiler flowrate (kg/s)	No		No	
Power demand external (kW)	HP → LP	7500	Extraction	7500
Reverse osmosis power demand (kW)	MP → LP	62.0	MP → LP	63.89
HEN Utility (kW)				
Cooling		1463.8		751.1
HP steam		3820.2		5727.2
MP steam		13628.2		21065.7
LP steam		4743.4		19110.2
Fcp,H1 (kW/K)		48		32
Fcp,C2 (kW/K)		144		216
WN flowrate (kg/s)				
Freshwater		7.26		6.47
Sand filter		7.2		6.4
Reverse osmosis		5.6		5.8
Scrubber		2.4		1.2

Conclusion

- Developed LP formulations for targeting minimum freshwater consumption for a set of water-using process units under a specific condition
- Extended the water targeting formulation to nonisothermal water network
- **Targeting method can be used to improve objective function and computational effort under the simultaneous approach for flowsheet optimization**
- **The interaction among power use, heat use, and water use can be exploited to achieve better flowsheet design**

Thank you!